EZ-SET® Extension Spring

Extension Assembly Installation Instructions

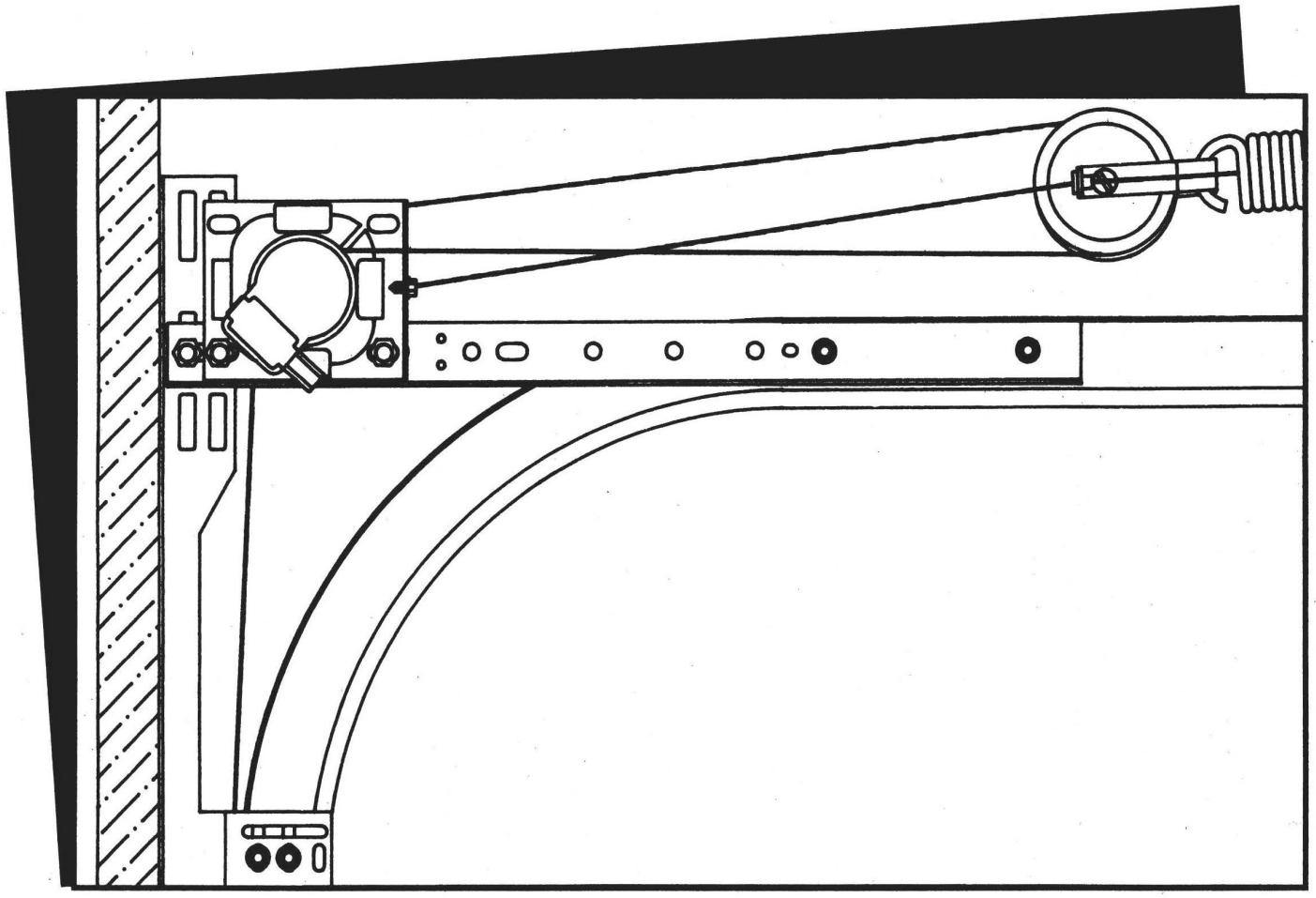

FR Français

La version française de ce supplément peut être accédée en ligne à l'adresse suivante : http://www.clopaydoor.com/installation-manuals.aspx

ES Español

Se puede acceder a la versión en español del presente suplemento en la siguiente dirección: http://www.clopaydoor.com/installation-manuals.aspx

EZ-SET Spring®
Assembly & Installation

These instructions are to be used in conjunction with your standard installation manual. Follow the installation manual up to "Assembling and Installing Extension Spring". Use these instructions for the EZ-SET Spring system only. (If you have extension or torsion springs see the standard installation manual.)

Note: DO NOT attach looped ends of lifting cables to bottom brackets of door at this time.

MINIMUM SIDEROOM FOR INSTALLATION
5-1/2" of sideroom is required for installation of the EZ-SET Spring system. (Standard extension spring installation requires 3-3/4" of sideroom.)

IMPORTANT!
DOOR SHOULD REMAIN IN CLOSED POSITION DURING EZ-SET SPRING INSTALLATION!

Tools Needed

- Electric Drill (reversible recommended)
- Socket wrench kit
- 1/4" hex driver (included) 

⚠WARNING

In the interest of safety this symbol means WARNING or CAUTION. Personal injury and/or property damage may occur unless instructions are followed carefully.

IF YOU HAVE LESS THAN 5-1/2" SIDEROOM, YOU MUST CONVERT TO EXTENSION SPRINGS. If standard extension springs are to be installed in place of the EZ-SET Spring Assembly, the following additional parts are required: extension spring lift cables and containment cables (1 pair each). *Note height of door*, 3-hole adjustment clip (2) , S-hook (2).

Parts List

Description	Door Size	Qty.
 Spring System Housing (includes lift cable)	Single Car Doors 8'–9' W x 7' H	2
	Double Car Doors 16' W x 7' H	2
 Housing Bracket	Single Car Doors 8'–9' W x 7' H	2
	Double Car Doors 16' W x 7' H	2
 Extension Spring	Single Car Doors 8'–9' W x 7' H	2
	Double Car Doors 16' W x 7' H	2
 5/16" Eye Bolt	Single Car Doors 8'–9' W x 7' H	2
	Double Car Doors 16' W x 7' H	2
 5/16" Flange Nut	Single Car Doors 8'–9' W x 7' H	4
	Double Car Doors 16' W x 7' H	4
 Sheave	Single Car Doors 8'–9' W x 7' H	2
	Double Car Doors 16' W x 7' H	2
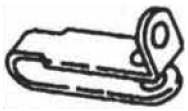 Sheave Fork	Single Car Doors 8'–9' W x 7' H	2
	Double Car Doors 16' W x 7' H	2
 3/8" x 1-1/4" Hex Head Bolt	Single Car Doors 8'–9' W x 7' H	2
	Double Car Doors 16' W x 7' H	2

Description	Door Size	Qty
 Black Bushing	Single Car Doors 8'–9' W x 7' H	2
	Double Car Doors 16' W x 7' H	2
 3/8" Flange Nut	Single Car Doors 8'–9' W x 7' H	8
	Double Car Doors 16' W x 7' H	8
 Safety Containment Cable	Single Car Doors 8'–9' W x 7' H	2
	Double Car Doors 16' W x 7' H	2
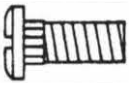 1/4" x 5/8" Track Bolt (double track low headroom doors only)	Single Car Doors 8'–9' W x 7' H	2
	Double Car Doors 16' W x 7' H	2
 1/4" Flange Nut (double track low headroom doors only)	Single Car Doors 8'–9' W x 7' H	2
	Double Car Doors 16' W x 7' H	2
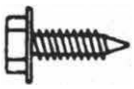 #14 x 5/8" Sheet Metal Screw	Single Car Doors 8'–9' W x 7' H	2
	Double Car Doors 16' W x 7' H	2
 3/8" x 3/4" Hex Head Bolt	Single Car Doors 8'–9' W x 7' H	4
	Double Car Doors 16' W x 7' H	4

Installing EZ-SET Spring® System

Step 1:
Assemble springs with sheaves on the floor. A 3/8" x 1-1/4" hex head bolt and 3/8" flange nut are used to attach the sheaves to the sheave fork. Be sure to attach the small black bushing into the sheave fork flange as shown. (Fig. 1)

Step 2:
Remove the spring system housing from the package and slide it into the housing bracket. The coiled cable will extend through the upper slot in the housing bracket. The “L” and “R” marks on the housing bracket determine the left hand and right-hand sides (when viewing the door from the inside of garage looking out). For example, the right- hand housing bracket will have the “R” on the top when properly installed on the right-hand side with the cable running through the upper slot. (Fig. 2)

Step 3:
Attach left-hand housing assembly to the front of the horizontal angle using two 3/8" x 3/4" hex head bolts and 3/8" flange nuts. The 3/8" x 3/4" bolt and nut closest to the jamb should also extend through the flag bracket using the first slot on the horizontal angle. The bolt and nut farthest from the jamb should be attached in the 2nd slot of the horizontal angle. Make sure the safety tab on the housing bracket engages the first round hole in the horizontal angle as shown. (Fig. 3)

Note: If the holes in your horizontal angle do not align properly with the housing bracket, it may be necessary to drill three 3/8" diameter holes in the horizontal angle as shown in Fig. 4. Two holes are for the 3/8" x 3/4" hex head bolts and 3/8" flange nuts and the other hole is for the safety tab.

⚠WARNING

Failure to properly engage safety tab could cause release of spring tension and could result In severe personal injury.

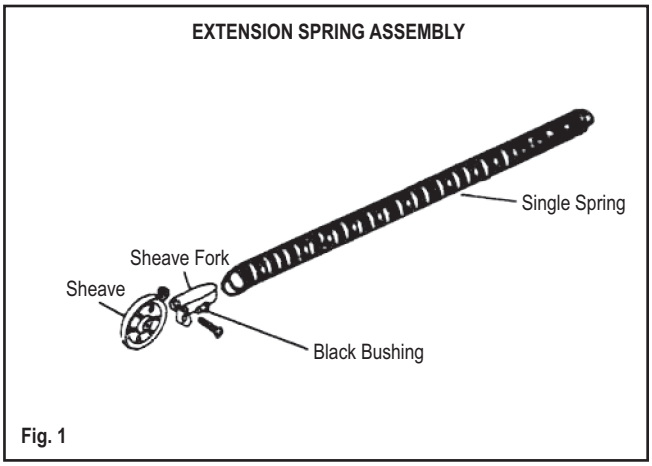

Fig. 1

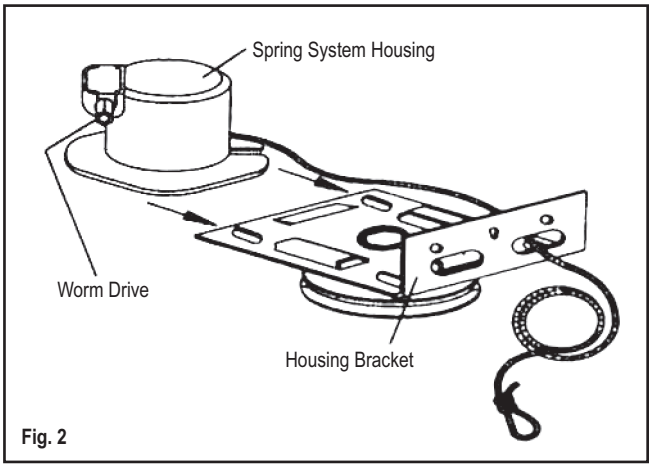

Fig. 2

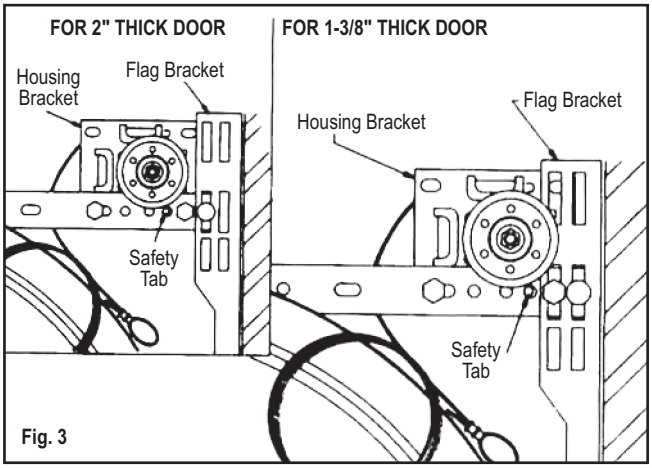

Fig. 3

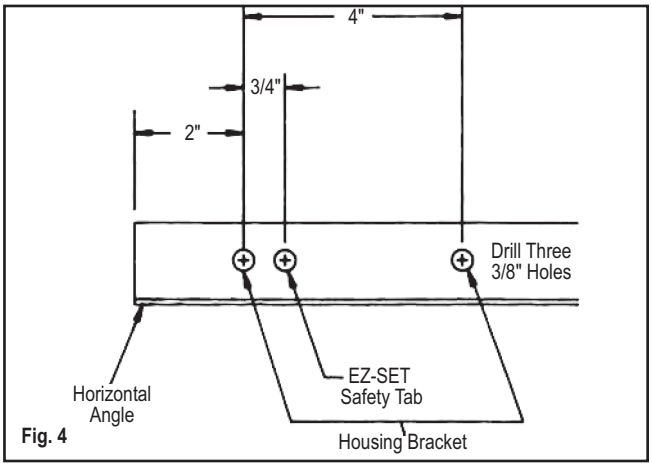

Fig. 4

Step 4:
Assemble one 5/16" eyebolt with one 5/16" flange nut on each side of the rear track hanger. The eye-bolts should be about 12" above the track to keep the spring assembly from dragging on the track. The eyebolts can be as low as 4" above the track if you have limited headroom. Tighten the 5/16" flange nuts. (Fig. 5)

REPEAT STEP 5 THROUGH STEP 8 FOR BOTH SIDES OF DOOR

Step 5:
Hook one end of an extension spring over the 5/16" eyebolt and allow to hang down temporarily. Attach a sheave fork assembly on the free end of the spring. Locate safety containment cable and run looped end through the extension spring and over the eyebolt. Feed free end of safety containment cable through the black bushing installed on the flange of the sheave fork and into key slot on the housing bracket. Pull the safety containment cable taut and clamp in place with a #14 x 5/8" sheet metal screw. Make sure the sheet metal screw is seated all the way against the flange of the housing bracket. (Figs. 6 and 7).

⚠WARNING

Garage door springs can cause serious injury and property damage if they break under tension and are not secured with safety cables.

Step 6:
Thread the looped end of the lift cable that is coming out of the black housing and run under and around the spring sheave, and then over and around the stationary sheave affixed to the back of the housing bracket. (Fig. 8)

Step 7:
Run looped end of lift cable down the side of the door between the door and track brackets. Attach loop of lift cable to the button on the bottom bracket of the door. (Fig. 9)

MAKE SURE DOOR IS LOCKED BEFORE TENSIONING THE SPRINGS.

Step 8:
Wind the worm drive on the black housing with a standard 3/8" drill using the 1/4" hex driver provided. Make sure 1/4" hex driver is inserted completely into the worm drive. The spring is tensioned by operating the drill in the forward (clockwise) direction. (Fig. 10)

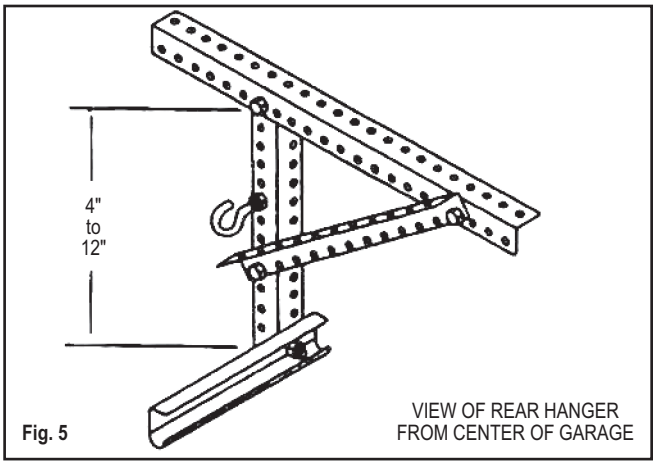

Fig. 5

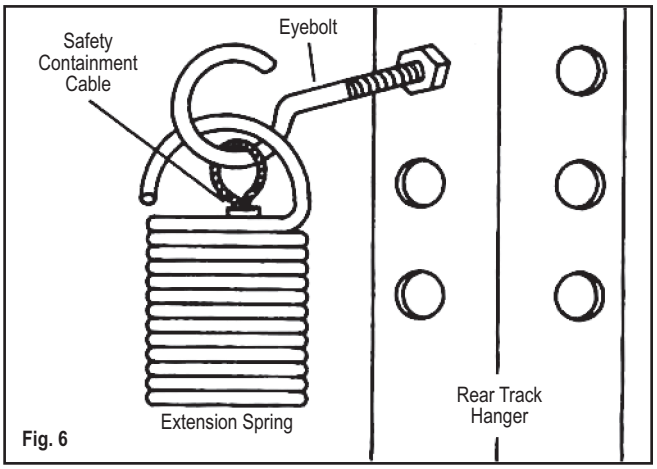

Fig. 6

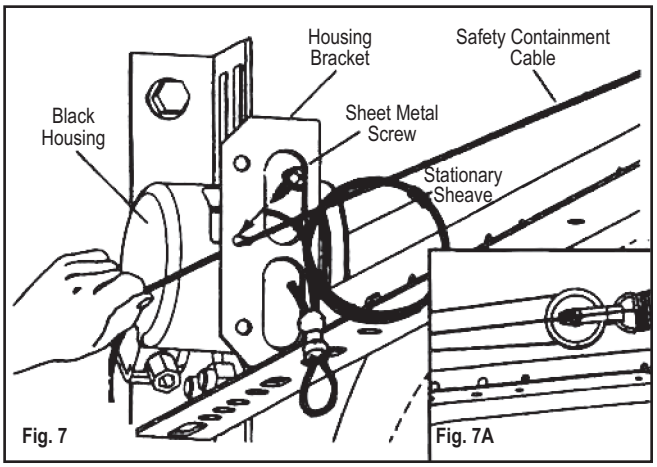

Fig. 7 Fig. 7A

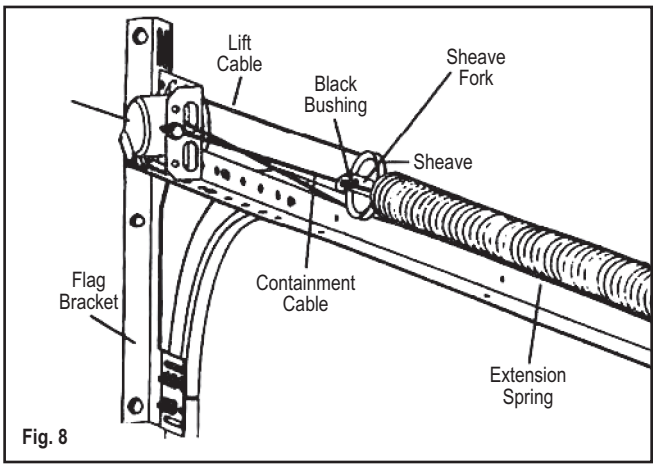

Fig. 8

⚠WARNING

Keep your head below the track when spring Is under tension or being tensioned as springs are dangerous when fully or partially wound.

Wind both springs until the black bushing installed on the flange of the sheave forks covers the red marks on the safety cables. The springs may need more or less tension to correctly balance the door weight. A properly balanced door takes an equal amount of force to lift the door as it does to lower the door. (Fig. 11)

Step 9:
To check spring tension, carefully raise the door about halfway open. Check to be sure the horizontal tracks are parallel with each side of the door. With the door about halfway open, make sure the gap between the edge of the door and track does not exceed 1/2". If adjustment of the rear track hangers is necessary, lower the door first and remove all tension from both springs using the instructions in Step 10 for decreasing spring tension. (Fig. 12)

⚠WARNING

This is the first time the door is being opened. If the tracks are not correctly aligned or the rear track hangers are not strong enough, the door may fall. Proceed slowly and carefully.

Step 10:
If the door wants to fall closed, more spring tension is required; if the door wants to lift open, less spring tension is required.

To increase spring tension: Insert the 1/4" hex driver completely into the worm drive using the forward (clockwise) direction on the drill. Increase tension on the springs only a few inches at a time.

To decrease spring tension: Insert the 1/4" hex driver completely into the worm drive using the reverse (counterclockwise) direction on the drill.

Both springs should be adjusted equally for proper operation.

Step 11:
Carefully raise the door to fully open position and check again to be sure the horizontal tracks are parallel with the edges of the door.

Your EZ-SET Spring® installation is now complete.

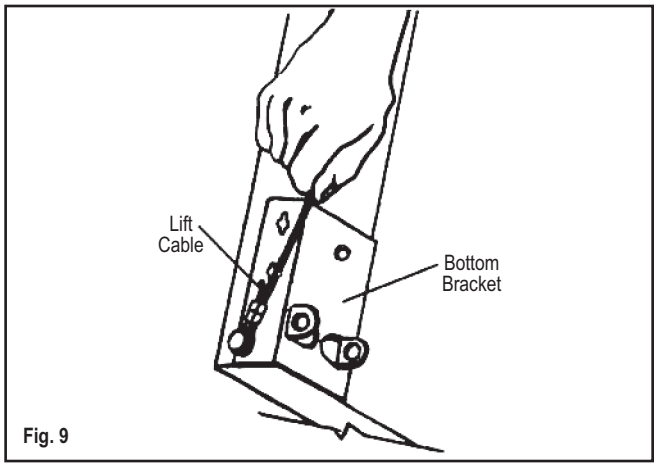

Fig. 9

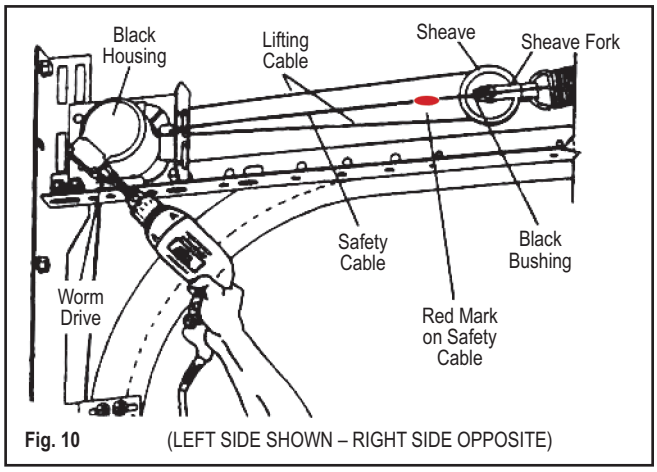

Fig. 10 (LEFT SIDE SHOWN – RIGHT SIDE OPPOSITE)

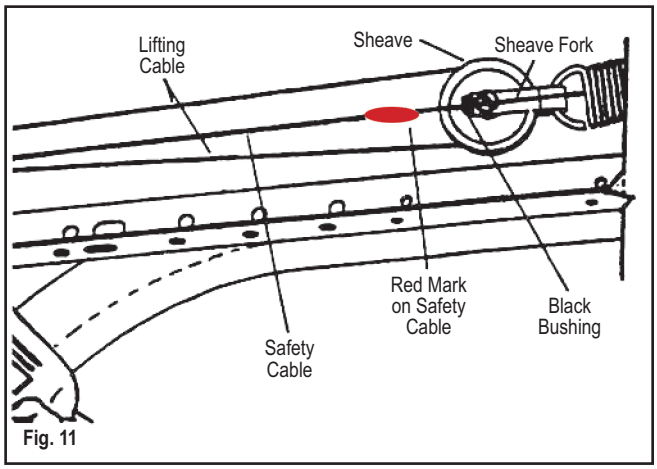

Fig. 11

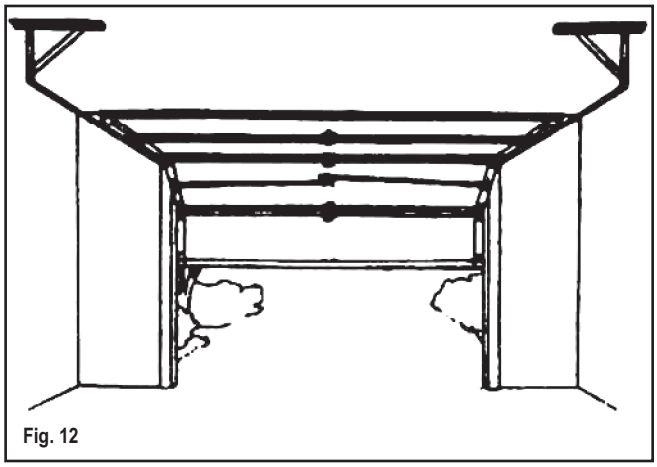
Fig. 12

Double Track Low Headroom Instructions for EZ-SET Spring®

Begin these instructions after completing Step 1 of the standard EZ-SET Spring instructions when installing double track low headroom and the EZ-SET Spring. Also follow the double track low headroom instructions for installation of the double track and top and bottom roller brackets.

Step 1L:
Remove the spring system housing from the package and slide it into the low headroom housing bracket. The “L” and “R” marks on the low headroom housing determine the left hand and right hand sides. The spring system housing and housing bracket, when assembled, should look as shown in Fig. 2L.

Step 2L:
Position the low headroom housing bracket so that the safety tab engages into the middle 3/8" diameter hole on the low headroom horizontal angle. You will notice that one of the holes at the back of the low headroom housing bracket lines up with one of the rivets in the low headroom horizontal angle. At this time it will be necessary to use a 1/4" drill bit to remove this rivet. Also note the position of the top hole where the sheave is attached to the low headroom housing bracket. (Fig. 2L)

Step 3L:
Attach sheave to the low headroom housing bracket and low headroom horizontal angle using a 3/8" – 16 x 1-1/4" hex head bolt and 3/8" flange nut. Also attach a 1/4" x 5/8" track bolt and 1/4" flange nut where the rivet had been removed in Step 2L. The head of the track bolt must be inside the track. (Fig. 3L)

Step 4L:
Return to the EZ-SET Spring instructions beginning with the Warning on page 3.

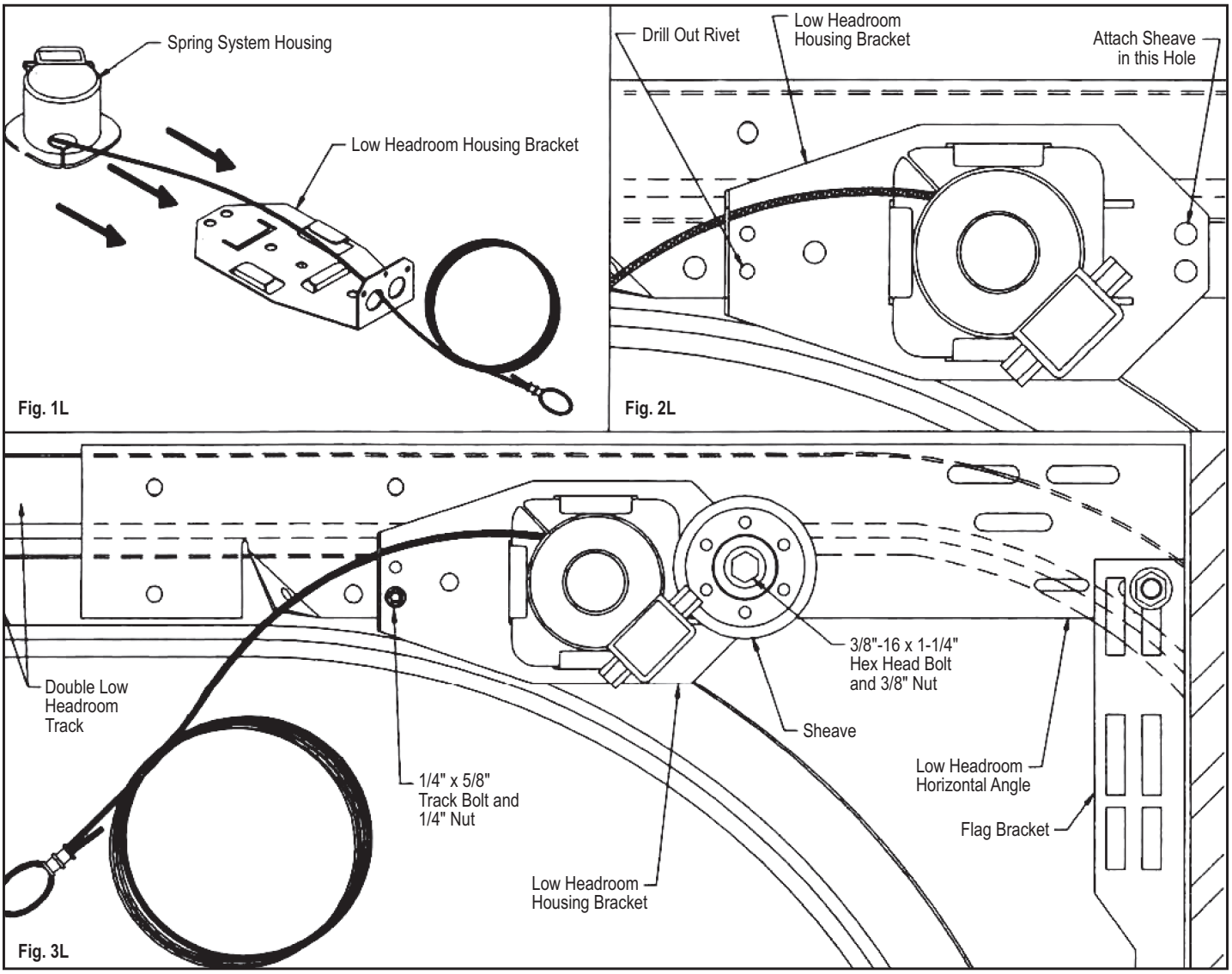

IMPORTANT!

ON INITIAL INSTALLATION, TENSION ***BOTH*** THE LEFT-HAND AND RIGHT-HAND SPRINGS BY WINDING THE 7/16" HEX WORM DRIVE SHAFT ON THE BLACK HOUSING ***CLOCKWISE***. REFER TO STEP #8 IN THE EZ-SET SPRING® INSTALLATION INSTRUCTIONS.

IF USING A REVERSIBLE DRILL, FORWARD DIRECTION IS CLOCKWISE ROTATION.

FAILURE TO SET INITIAL TENSION WITH CLOCKWISE ROTATION MAY RESULT IN DAMAGE TO THE EZ-SET SPRING UNIT.

ONCE INSTALLED, ADJUSTMENTS MAY BE MADE BY EITHER INCREASING TENSION (CLOCKWISE) OR DECREASING TENSION (COUNTERCLOCKWISE). REFER TO INSTRUCTIONS.

MAKE SURE THE 1/4" HEX DRIVER IS INSERTED COMPLETELY INTO THE WORM DRIVE BEFORE WINDING.