VERTISTACK™ CLEAR DOOR

# INSTALLATION & MAINTENANCE

COMMERCIAL HOTLINE • 1-800-277-2576

Clopay® CORPORATION

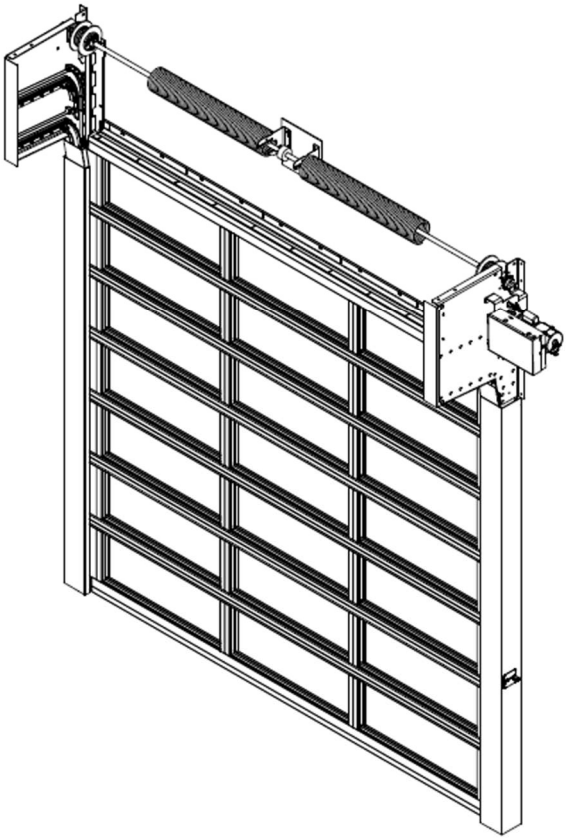

Installation Instruction Video

**Model:**_____ **Serial No.** _____

(Provided on label on interior door surface)

**Size:** _____

*Thank you for purchasing a VertiStack ™ Door. Your new VertiStack Door was built to meet highest industry standards and provide you with years of dependable performance. This manual contains important safety, installation and maintenance instructions and warnings. Please carefully and strictly follow all instructions and maintenance recommendations and keep this manual for future reference. If you should require any assistance or additional information, please call the hotline number on the cover of this manual.*

*Thank you again for choosing Clopay Corporation products!*

Clopay® CORPORATION

Attention! This product is intended for Commercial applications only. **Installation of this product in Residential applications will void the VertiStack warranty.**

Please refer to the Warranty document for more details.

Installation training on this product is required.

**TABLE OF CONTENTS**

## SAFETY INFORMATION

**⚠ WARNING**

**NOTE – THESE SYMBOLS:** ⚠ **⚠WARNING** **MEAN "WARNING" AND A SITUATION WHERE DEATH OR SERIOUS INJURY COULD RESULT IF INSTRUCTIONS ARE NOT CAREFULLY FOLLOWED.**

**TO PROTECT YOURSELF FROM INJURY, CAREFULLY READ AND STRICTLY FOLLOW ALL SAFETY INFORMATION AND WARNINGS.**

**FOR CERTIFIED INSTALLERS:**

⚠ **ALL INSTALLATION AND MAINTENANCE INSTRUCTIONS FOR THIS PRODUCT MUST BE PERFORMED BY A CERTIFIED INSTALLER, WHICH IS DEFINED AS A DEALER THAT HAS SUCCESSFULLY COMPLETED ALL REQUIRED VERTISTACK TRAINING PROVIDED BY THE MANUFACTURER.**

⚠ **TWO (2) OR MORE INSTALLER TECHNICIANS ARE RECOMMENDED FOR INSTALLING THIS DOOR.**

⚠ **DOOR CONTROLS MUST BE INSTALLED WITHIN THREE (3) FEET OF THE DOOR AND WITH CLEAR VISUAL LINE OF SIGHT TO THE DOOR.**

⚠ **DO NOT USE SCREWDRIVERS OR ANY SUBSTITUTES FOR SOLID STEEL WINDING BARS WHEN INSTALLING A DOOR WITH TORSION SPRINGS, WHICH COULD RESULT IN SUDDEN RELEASE OF SPRING FORCES WITH DANGEROUS FORCE AND RISK SEVERE INJURY. SEE "SPRING WINDING" FOR FURTHER SAFETY INSTRUCTIONS REGARDING WINDING BARS.**

⚠ **DO NOT USE ANY SUBSTITUTES FOR THE TRACK AND HARDWARE SPECIFIED AND SUPPLIED WITH THE DOOR SYSTEM. USE OF UNAPPROVED SUBSTITUTE COMPONENTS MAY RESULT IN INCORRECT OR DANGEROUS OPERATION, RESULTING IN SEVERE INJURY OR DEATH.**

⚠ **ONLY USE PROPER CONNECTION STRUCTURES FOR THE TORSION SPRING ASSEMBLY BY USING A WOODEN PAD (2" X 6" X 12" [51 MM X 152 MM X 305 MM] MINIMUM) OR STEEL PLATE (1/4" X 10" X 12" [6 MM 254 MM X 305 MM] MINIMUM) PER SPRING ANCHOR BRACKET THAT MUST BE OF GOOD QUALITY AND FIRMLY ATTACHED TO THE WALL. THE WOOD NEEDS TO BE MADE OF A GRADE 2 OR BETTER SOUTHERN YELLOW PINE (ALSO KNOWN AS SOUTHERN PINE OR YELLOW PINE).**

⚠ **DO NOT USE WOOD LABELED AS SPRUCE-PINE-FIR (OR SPF), FIBERBOARD, OR ANY UNAPPROVED SURFACE/MATERIAL (SUCH AS DRYWALL) AS AN ATTACHMENT POINT FOR THE VERTISTACK DOOR TO THE BUILDING, USE OF WHICH COULD RESULT IN THE SUDDEN RELEASE OF SPRING FORCES AND RESULT IN SEVERE INJURY. IF THE WOOD SPLITS ONCE THE TORSION SPRING IS IN PLACE, IT SHOULD BE REPLACED BY A CERTIFIED INSTALLER.**

⚠ **CAREFULLY REVIEW, FAMILIARIZE, AND FOLLOW ALL "FOR USERS" WARNINGS BELOW.**

Once you have completed the installation of your new VertiStack door, please be sure that it complies with all applicable ventilation requirements before you enclose any vehicles. Good ventilation avoids fire and health hazards caused by fumes accumulating within a well-sealed VertiStack door.

The manufacturer disclaims all – and shall not be responsible for any – all liability for any installation which is not in compliance with applicable state, county, or local building codes.

**FOR USERS:**

**DO NOT OPERATE IF THE DOOR'S TEMPERATURE IS 32°F (0°C) OR BELOW.**

**DO NOT OPERATE IF AN OPERATING ISSUE ARISES. IMMEDIATELY STOP USE AND CONTACT YOUR CERTIFIED INSTALLER. NEVER ATTEMPT REPAIR OR MANUAL OPERATION.**

**TO ENSURE SAFETY DEVICES AND PROCESSES ARE FULLY FUNCTIONAL, ALL USERS MUST OPERATE THIS DOOR USING THE MOTOR OR OPERATOR SET TO "MOMENTARY CONTACT" SETTINGS WHENEVER POSSIBLE.**

**USERS OPERATING THE DOOR MUST MAKE SURE THERE ARE NO PEOPLE OR OBJECTS WITHIN THREE (3) FOOT RADIUS AROUND THE DOOR AND WATCH THE DOOR AT ALL TIMES WHILE IN OPERATION.**

**DO NOT ATTEMPT TO ADJUST ANY DOOR COMPONENT OR TOUCH DOOR SECTIONS DURING OPERATION OR WHILE AT REST. DOING SO COULD RELEASE DOOR SECTIONS AND RISK SEVERE INJURY, INCLUDING FINGER PINCH, CRUSHING OR AMPUTATION-TYPE INJURIES.**

**DO NOT ATTEMPT TO LOOSEN ANY BRACKET FASTENERS AND/OR ANY RED COLORED FASTENERS EXCEPT WHEN AND AS DIRECTED IN DETAIL IN THE FOLLOWING INSTRUCTIONS. DOING SO COULD SUDDENLY RELEASE SPRING FORCES WITH DANGEROUS FORCE AND RISK SEVERE INJURY.**

**DO NOT ATTEMPT TO LOOSEN ANY FASTENERS ON SPRING OR STRAP COMPONENTS. DOING SO COULD SUDDENLY RELEASE SPRING FORCES WITH DANGEROUS FORCE AND RISK SEVERE INJURY.**

**DO NOT TRY TO REMOVE OR REPAIR A TORSION SPRING ASSEMBLY OR ANY RED COLORED FASTENERS ONCE IT IS WOUND. DOING SO COULD SUDDENLY RELEASE SPRING FORCES WITH DANGEROUS FORCE AND RISK SEVERE INJURY OR DEATH.**

**DO NOT OPERATE OR ATTEMPT TO MOVE THE VERTISTACK DOOR SECTIONS IF ANY OF THE SUPPORTING TRACK ARE DAMAGED OR IF THE DOOR SECTIONS BECOME STUCK WITHIN THE TRACK, AND IMMEDIATELY CALL AN AUTHORIZED REPRESENTATIVE OF THE MANUFACTURER OR A CERTIFIED INSTALLER. ATTEMPTING TO MOVE OR FORCE MOVEMENT MAY CAUSE THE DOORS SECTIONS TO SUDDENLY RELEASE WITH FORCE AND COULD RESULT IN DEATH OR SEVERE INJURY INCLUDING PINCH, CRUSH OR AMPUTATION.**

**DO NOT PLACE HANDS OR FINGERS IN THE DOOR SECTION JOINTS, TRACK, OR ANY OTHER DOOR PARTS WHEN THE DOOR IS OPENING AND CLOSING, AS FINGER PINCH, CRUSH OR AMPUTATION-TYPE INJURIES MAY RESULT.**

**DO NOT INSERT A STICK-LIKE DEVICE OR HANDS BETWEEN DOOR SECTIONS IF THE DOOR SECTIONS STOP MOVING WITHIN THE TRACK, AS STOPPED DOOR SECTIONS CAN SUDDENLY RELEASE WITH FORCE AND RISK SEVERE INJURY, INCLUDING PINCH, CRUSH OR AMPUTATION-TYPE INJURIES.**

**DO NOT PERMIT CHILDREN TO PLAY BENEATH OR WITH ANY VERTISTACK DOOR OR ELECTRIC OPERATING CONTROLS.**

**DO REVIEW ALL WARNINGS ON THE DOOR. IF WARNINGS ARE MISSING OR IF YOU REQUIRE ASSISTANCE WITH THESE MAINTENANCE STEPS, REPAIR OR REPLACEMENT OF ANY PARTS, PLEASE CONTACT YOUR CERTIFIED INSTALLER.**

**ALWAYS LOCK THE VERTISTACK DOOR WHEN IT IS IN THE CLOSED POSITION IN ORDER TO PREVENT INDEPENDENT MOVEMENT OF PANELS AND UNINTENTIONAL ACTIVATION/MOVEMENT OF THE DOOR.**

The manufacturer disclaims all – and shall not be responsible for any – all liability for any installation which is not in compliance with applicable state, county, or local building codes.

**NOTICE**

Releasing a VertiStack door order requires certification from the dealer that all individual(s) handling or installing the VertiStack door product have successfully completed all “VertiStack Door Installation Training” and installed said product as strictly required in this Installation Manual. DO NOT ATTEMPT TO INSTALL ANY VERTISTACK DOOR PRODUCT UNLESS AND UNTIL YOU HAVE RECEIVED INSTALLATION TRAINING AND CERTIFICATION FROM THE MANUFACTURER.

# Things to Know Before You Begin

YOU MUST HAVE COMPLETED THE MANUFACTURER'S VERTISTACK DOOR INSTALLATION TRANING AND BE CERTIFIED BEFORE ANY INSTALLATION IS ATTEMPTED. Carefully read these instructions in their entirety before starting installation of the door. Becoming familiar with the components before assembling the door will help reduce installation time.

**WARNING**

**Springs and related hardware are under EXTREME tension and could cause SEVERE INJURY OR DEATH if mishandled. DO NOT ATTEMPT TO REPAIR OR ADJUST the springs, red fasteners, hardware or structure to which they are attached.**

**NOTICE**

To ensure smooth operation, it is recommended to install and operate the door in a temperature-controlled environment. Operating the door in freezing temperatures, without interior temperature regulation, may inhibit smooth operation.

## Before Starting Installation:

- Check the opening size and verify that the door is the proper size for the opening. As standard, door sections are 6" wider than the opening regardless of jamb type. No stop moldings are required in this application. The opening must be plumb and square to assure a good fit.
- Check all materials with the hardware box and spring box labels to ensure you have all the correct parts, both in number and type. Any report of shortages must be accompanied by the contract number. Report the number of pieces received along with the number of pieces short. Springing information, including the number of turns to wind spring, can be found on the hardware box label.
- Check for sufficient headroom and side room. Headroom is the distance between the top of opening to the ceiling or the lowest obstruction.
- The hardware package supplied with your door should include red fasteners for attachment of the torsion spring center bracket and other components or assemblies under tension. These fasteners must be securely attached as indicated in the installation manual.

## Tools Needed

- Laser Level
- “C” Clamps or Locking Pliers
- Hammer
- Winding Bars (Torsion Only)
- Screwdriver
- Tape Measure
- Level
- Socket wrench kit
- Pliers
- Drill and 1/4" [6 mm], 3/16" [5 mm] and 3/8" [10 mm] bits
- Ladder
- Sawhorses or other supports for placing section on while assembling
- Pencil/Pen/Marker
- Chalk/Chalk Line
- Allen wrench kit
- Loctite® Blue thread locking sealant

# Freight Receiving

**NOTICE**

If the installation proceeds without following the instructions below, neither the carrier nor the manufacturer will assume responsibility for replacing any damaged material, installation issues that arise, or any personal injury or property damage that may result.

**STEP1 – UPON DELIVERY, CHECK CONDITION OF COMPONENTS FOR DAMAGE.**

- **If damage occurred in transit, the installation should not proceed without authorization from the manufacturer.**

- **If damage is discovered during installation, do the following:**
  1. Take pictures of the damage.
  2. Do not move material from point of delivery to other premises once the damaged components are discovered.
  3. If the damage is visible prior to removing packaging, do not unpack anything further until an inspection is made.
  4. If the damage is found while removing contents from packaging, the packaging material must be saved until an inspection is made.
  5. Container and packaging should be retained by consignee until an inspection is made.
  6. Have components inspected by carrier's representative within fifteen (15) days from date of delivery.
  7. Consignee must obtain a copy of the Inspection Report.

- **Returning damaged components:**
  1. Obtain written permission from carrier to return.
  2. Route the return shipment via the identical carrier(s) involved in the original shipment.
  3. Notify the manufacturer when shipment is returned to manufacture plant.

**STEP 2 – CHECK FOR ANY MISSING COMPONENTS.**

- **Verify that all components have arrived, looking for each of the following:**
  1. Two (2) Lower Wall Angles, two (2) Upper Wall Angles, two (2) Bracket Assemblies, two (2) Guide Covers, two (2) Lock Component set, two (2) Bracket Stops, Header Seal Cross Member(s), and two sets of (2) Removable Track
  2. Shaft(s)
  3. Spring(s)
  4. Top Section, Top Section Seal Plate(s), Bottom Section, and Intermediate Sections (note: the specific number of sections depends on door height)
  5. Hardware Box containing: Two (2) Spring Cone(s), two (2) Straps, two (2) Spools, two (2) Spool Spacers, Spring/Shaft Bracket(s), two (2) Spring Bearing(s), two (2) Shaft bearings, and two (2) Sensors.
  6. Operator Box & Operator Mounting Bracket
  7. Bracket Support & Bracket Spacer (only required with front mount operator)
  8. Lintel/Jamb Seal
  9. One of the following: Light Curtains (3' or 6'), Photo Eyes, or Sensing Edge and Wireless Kit
  10. (Optional) Hood Sections (2 or 3 sided), Hood Hardware, Hood Support (only required if opening width is greater than 13' wide).
  11. (Optional) Chain cover.

- **If the delivery is incomplete:**
  1. Make note on delivery receipt.
  2. Note should be verified by driver's signature.
  3. Notify both carrier and manufacturer.

## Checking and Preparing the Opening

1. Check the floor to ensure it is level. If necessary, shim the area where the wall angle and track will sit on the floor.
   a. This step is critical to getting the shaft level later on in the installation.
   b. If the floor is more than 1/4" [6 mm] per 10 feet [3048 mm] of width out of level, stop and consult factory.
2. Check the width of the opening.
   a. If the opening is ¼" or more than the measurement stated on the shop drawings, add material to the inside of the jambs so the wall angles do not protrude into the opening.
   b. If the opening is less than the measurement stated on the shop drawings, split the difference at both jambs and place a mark at this location. Be sure there is adequate structure to fasten to at this location.
3. Check the opening height.
   a. If the opening height is greater than the measurement stated on the shop drawings, material will need to be added to the underside of the lintel to ensure the door seals properly when fully closed.
4. Check the area above and to the sides of the opening to ensure there are no obstacles that will be in the way of the installation (such as ductwork, heaters, water/gas/electrical conduit, etc.).

## Installing the Right-Hand Wall Angle, Track, and Brackets

5. Locate lower wall angle and track assemblies. See **Figure 1 & 2** to identify right-hand and left-hand lower wall angles. Note that the track extends above the wall angle at the top.

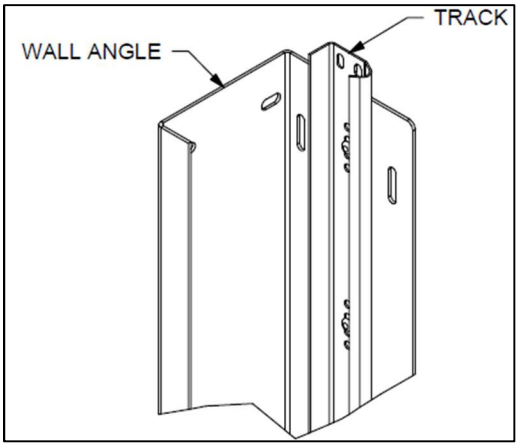


***Figure 1 - TOP OF RIGHT-HAND LOWER WALL ANGLE ASSEMBLY***

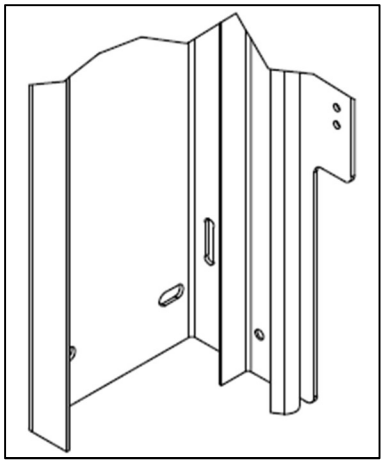

***Figure 2 - BOTTOM OF RIGHT-HAND LOWER WALL ANGLE ASSEMBLY***

6. Disassemble track from the right-hand lower wall angle and set track aside.

(Note: The lower wall angle cannot be installed properly without removing the track first).

7. Place lower wall angle on the floor (shim if needed) against the jamb, holding the small flange of the wall angle flush with the inside of the jamb.
   I. If the opening is less than the measurement stated on the shop drawings, set the lower wall angles back from the jamb an equal distance on both left and right-hand sides so that the distance between them is equal to the opening stated on the shop drawing.
   II. Be sure there is adequate structure per shop drawing requirements to fasten to at this location.
8. Locate the wall fasteners in the hardware box.
9. Fasten the right-hand lower wall angle to the wall. Predrill holes if attaching to steel or concrete.
10. Locate the right-hand upper wall angle assembly, see **Figure 3**.

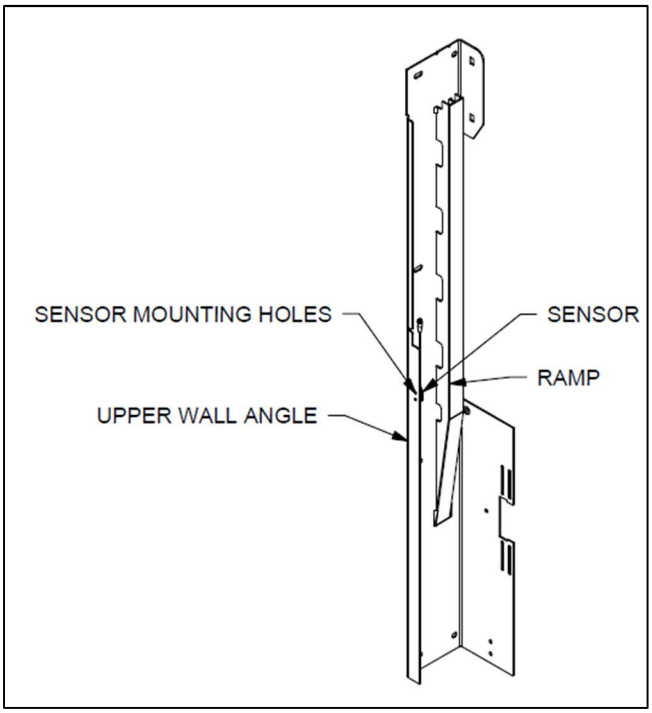


***Figure 3 - RIGHT HAND UPPER WALL ANGLE ASSEMBLY***

11. Place the right-hand upper wall angle assembly on top of the lower wall angle and against the jamb, holding it in line with the lower wall angle assembly.
12. **Ensure both lower and upper wall angles are plumb.**

13. Fasten the upper wall angle assembly to the wall using the supplied fasteners. Mark and predrill holes if desired.
14. Attach sensor to upper wall angle, referring to **Figure 4** for placement:
    a. Locate sensor mounting studs.
    b. Ensure lens on sensor is pointing **OUTWARDS** from inside of wall angle.
    c. Attach sensor to studs and install nuts to fasten sensor.

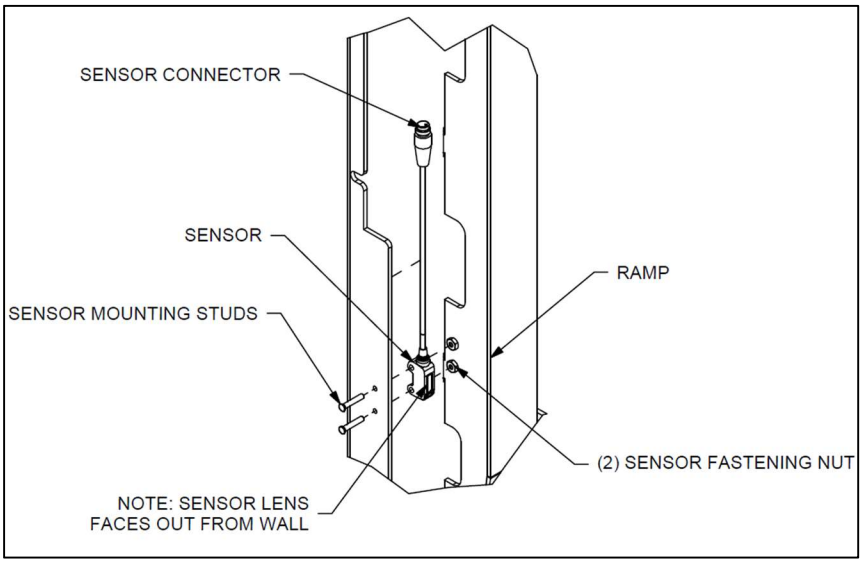


***Figure 4 - SENSOR MOUNTING TO UPPER WALL ANGLE***

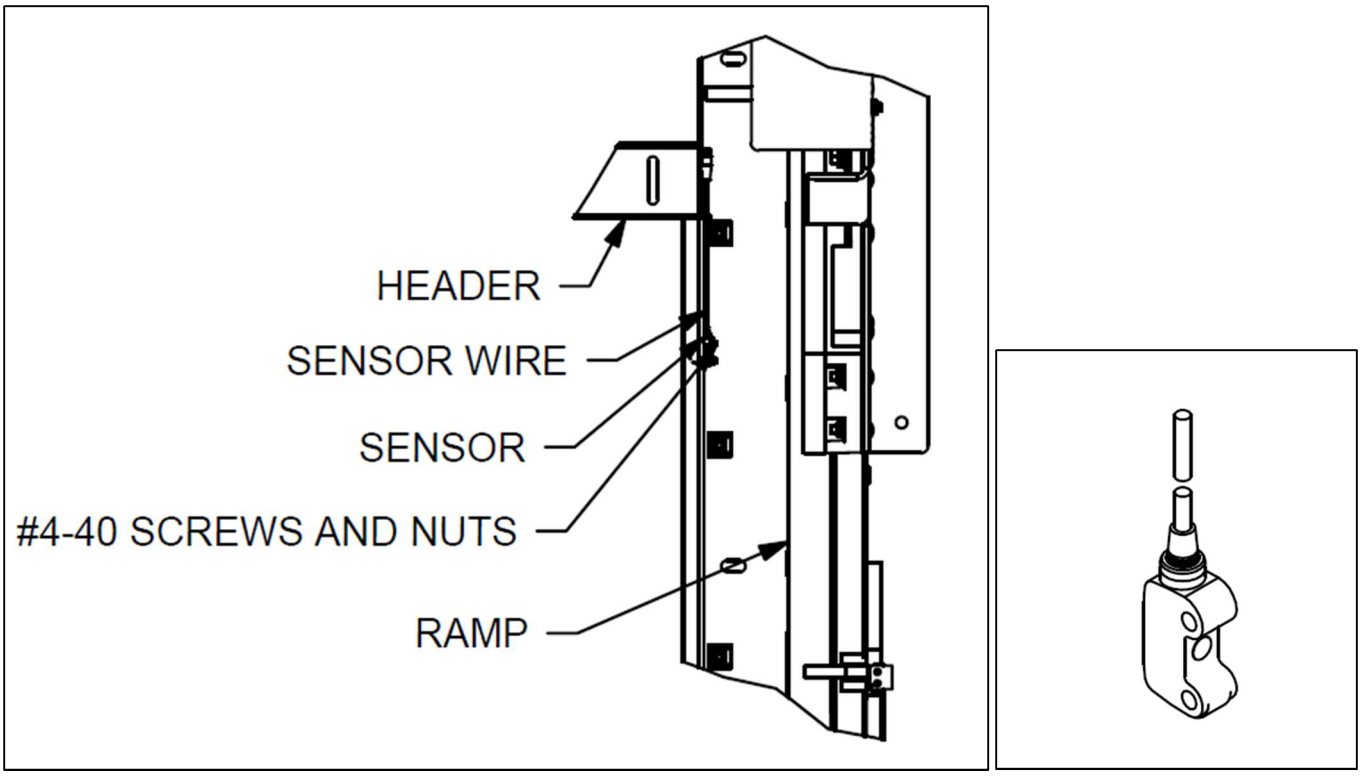


***Figure 5 - SENSOR LOCATION***

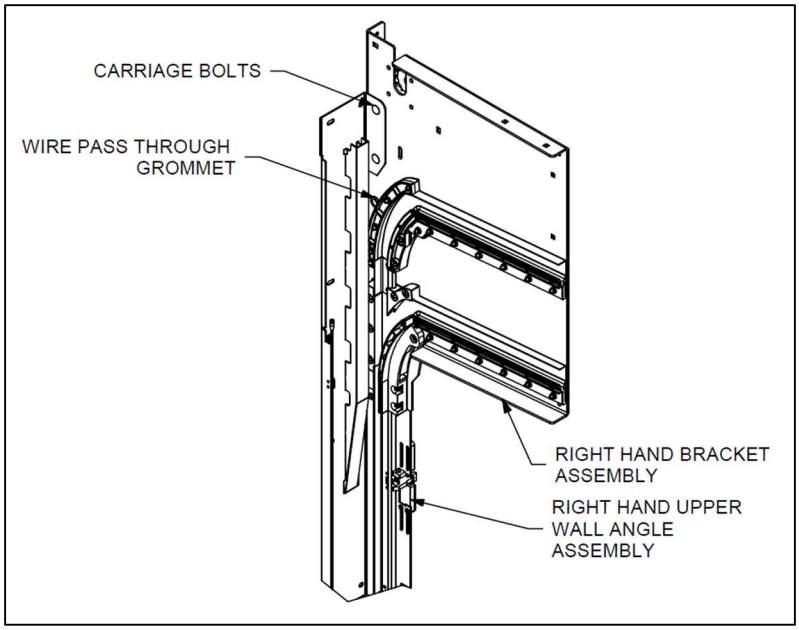


***Figure 6 - WIRING HARNESS PATH***

15. Locate the right-hand bracket assembly, see figure below. Attach the bracket assembly to the upper wall angle assembly using the 3/8 x 1” [9 mm x 25 mm] carriage bolts, washers, and nuts provided in the hardware box. See **Figure 7**.
    a. Note: Nuts go on the outside of the bracket.

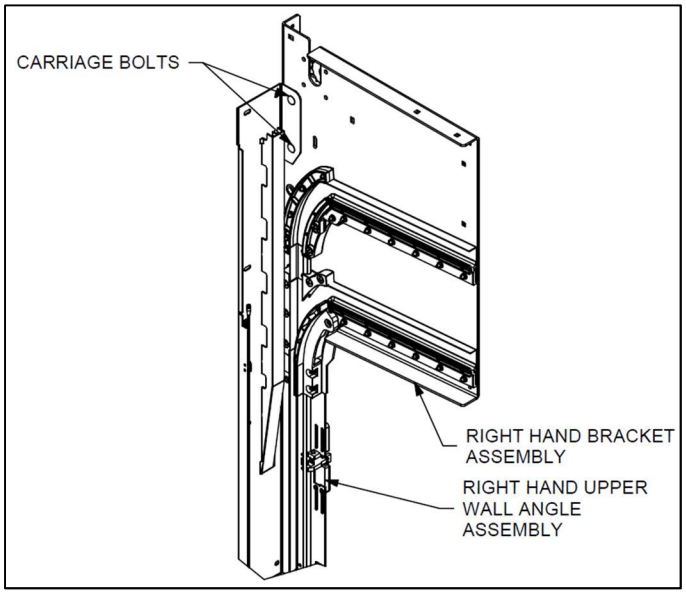


***Figure 7 – RIGHT-HAND BRACKET ASSEMBLY MOUNTED TO UPPER WALL ANGLE ASSEMBLY***

16. Locate the wiring harness extensions for both of the sensors. The ends without the connectors will be fed behind the ramp.
17. As the bracket is being installed, run both sensor wiring harness extensions through grommet hole in bracket displayed in **Figure 6**.
18. Wires will then hang free until future steps.
19. Fasten the bracket assembly to the wall through the flange in the bracket using the appropriate hardware. See **Figure 8**. Note: If your door includes a side-mounted operator, do not install fastener in operator mount location until operator installation.

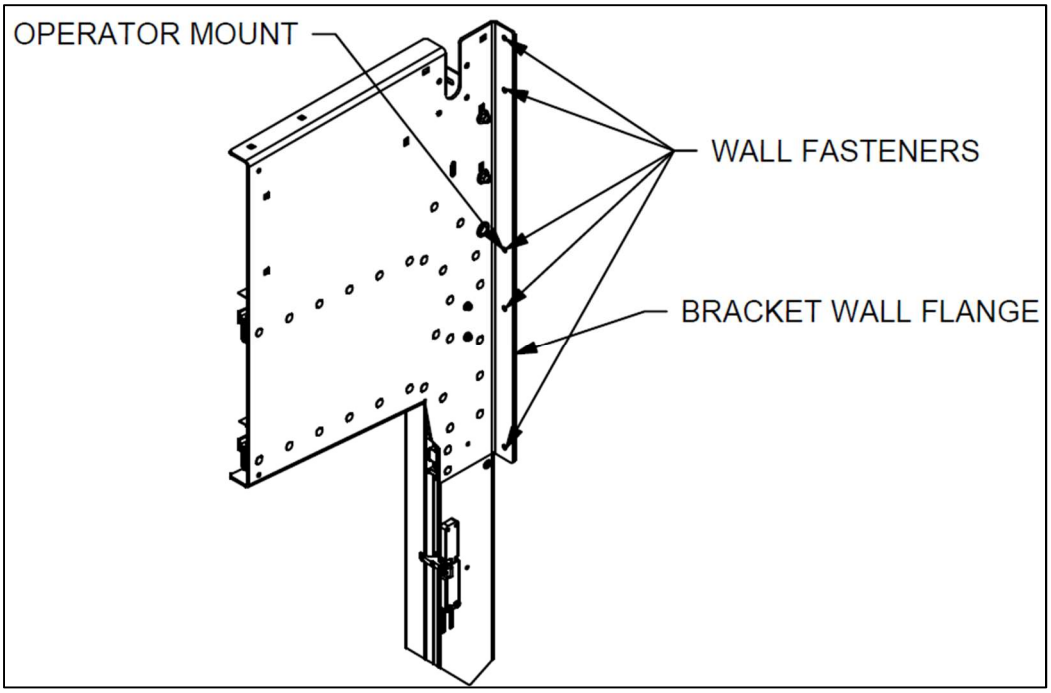


***Figure 8 - RIGHT HAND BRACKET ASSEMBLY WITH WALL FASTENERS***

20. Attach the lower track piece, removed in step 6, to the wall angle using 1/4" x 5/8" [6 mm x 16 mm] track bolts and nuts. Making sure to also install the additional track bolt in the top of the track through the top wall angle. The upper removable track piece will not be installed at this time to allow for loading of sections later on.

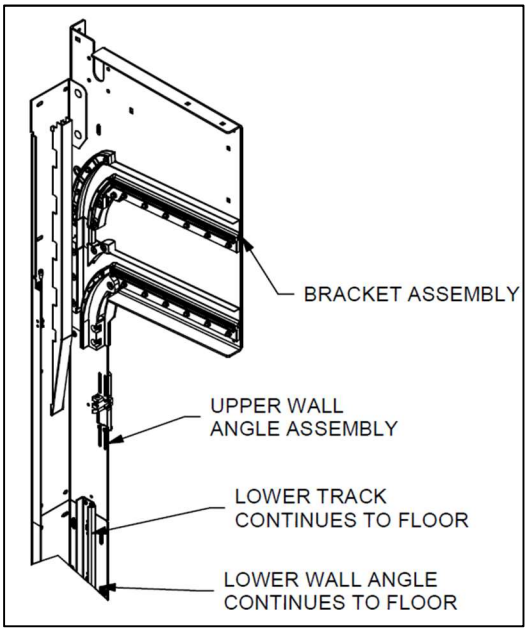


***Figure 9 – RIGHT-HAND WALL ANGLE, TRACK, AND BRACKET ASSEMBLY***

**NOTE: In order to ensure the correct spacing between the right and left-hand wall angles, the Header Seal Cross Member is used as an installation tool to SET the spacing between wall angles.**

## Installing the Left-Hand Wall Angle, Track, and Brackets

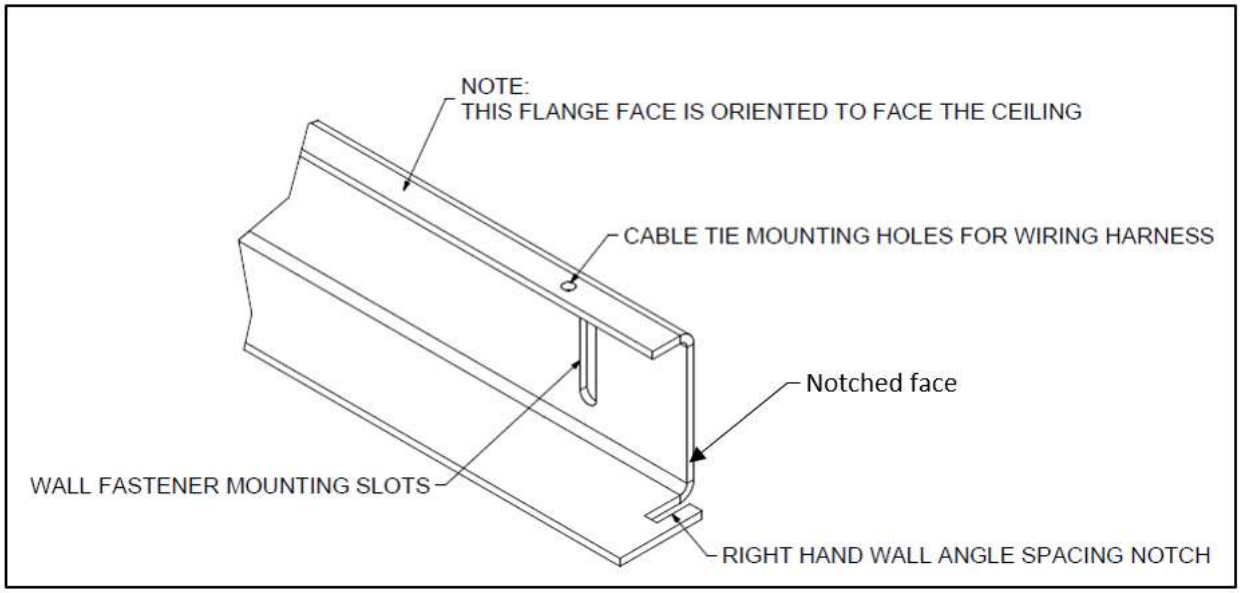


***Figure 10 – Header Seal Cross Member***

21. Locate the header seal cross member. This will be used to set the spacing of the left-hand lower wall angle.
22. Measure the length of the header seal cross member from notched face to notched face and confirm it equals the opening width dimension listed on the shop sheet.
23. Referring to **Figure 10** and **Figure 11**, place the header seal cross member across the opening with the larger flange resting on the ground. The right-hand wall angle spacing notch will go over the smaller flange on the right-hand lower wall angle.
24. Ensure the header seal cross member is level across the opening.

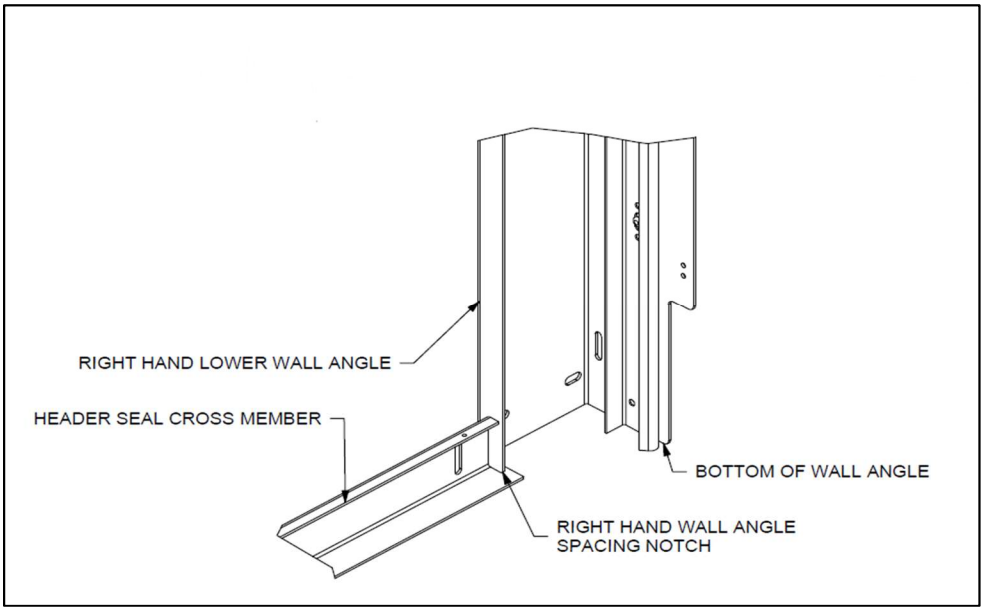


***Figure 11 - HEADER SEAL CROSS MEMBER INSTALLATION SPACER***

25. Disassemble the left-hand track from the lower wall angle.

26. Plumb the left-hand wall angle against the wall. The short flange of the wall angle should be flush with the jamb or on the mark placed on the jamb if the opening width was less than stated on the shop drawings, see step 2.
27. Use the header seal cross member to verify the proper spacing for the left-hand wall angle. Place short flange on left-hand wall angle inside of left-hand wall angle spacing notch, mirroring **Figure 11**.
28. Use header seal cross member to ensure equal spacing between wall angles over opening height.
29. If the distance between the wall angles is correct, **repeat steps 5 through 20** for the left side of the opening, leaving out the upper removable track piece. This will allow the loading of the sections later on.

## Installing Track Rollers, Strap and Loading Bottom Section

30. Locate the bottom door section. It could be differentiated from the other sections by referencing the bottom inserts (bottom left and right corner). The bottom section will have the strap bottom inserts which differ from any other section. Place it on sawhorses or other supports.
31. If a sensing edge option has been selected, slide the sensing edge on to the bottom retainer, making sure the sensing edge wire lead is oriented toward the same side of the door as the operator mounting position.
32. Install the track rollers, making sure to slide an axle spacer on each of the track roller axles before inserting the track rollers into the end stiles of each section. For larger doors, a heavy-duty white track roller will be supplied. This roller is installed toward the bottom of the section, nearest the strap bottom insert.

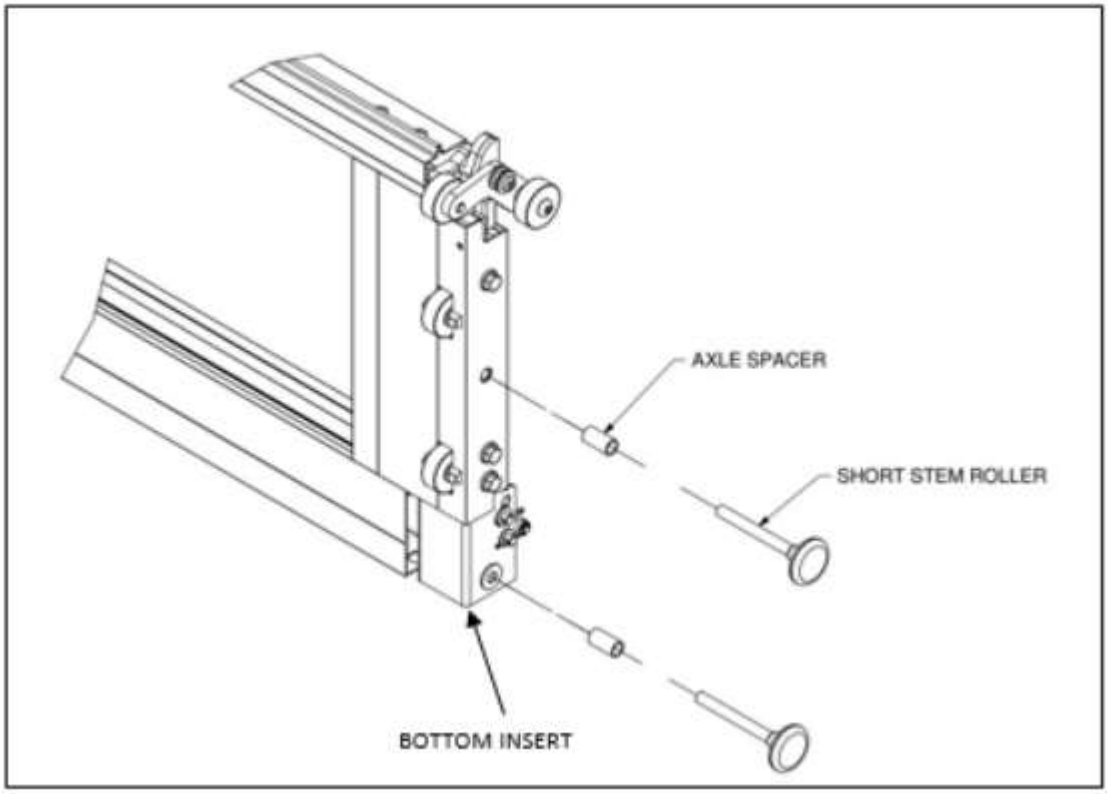


***Figure 12 - BOTTOM SECTION WITH RIGHT-HAND END STILE DETAIL.***

**IMPORTANT: Insert the track rollers into end stiles, there are two per side of the section. Be sure to place the axle spacers over the track roller axles before inserting the track rollers into the end stiles.**

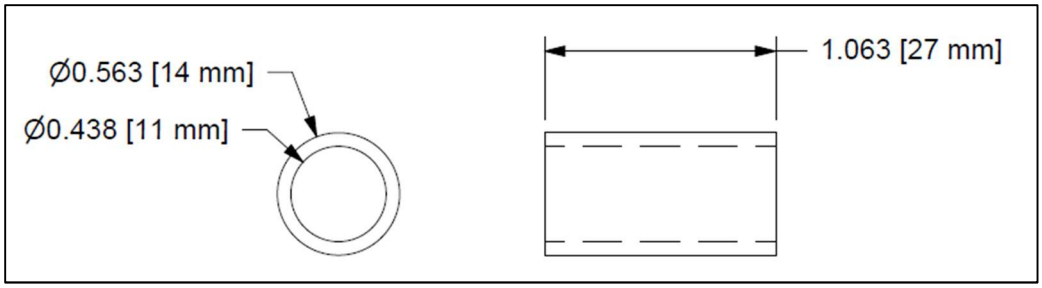


***Figure 13 - AXLE SPACER***

33. Remove the cotter pin in order to remove the strap pin shown in **Figure 14.**

34. Attach the straps to the bottom section.
    a. Place the loop of the strap, without tag and with the fold over side facing the door, in the bottom insert assembly.
    b. Re-Insert the strap pin in the existing location followed by the cotter pin. Once the cotter pin is in place, bend one leg over the pin.
    I. If the door includes the safety brake safety system option as shown in **Figure 15**, as the strap becomes tight the stop mechanism will rotate into the bottom insert assembly and out of the way of operation. If the strap becomes loose, due to failure or other reasons, the stop mechanism will deploy and catch the toothed angle installed on the wall angle.

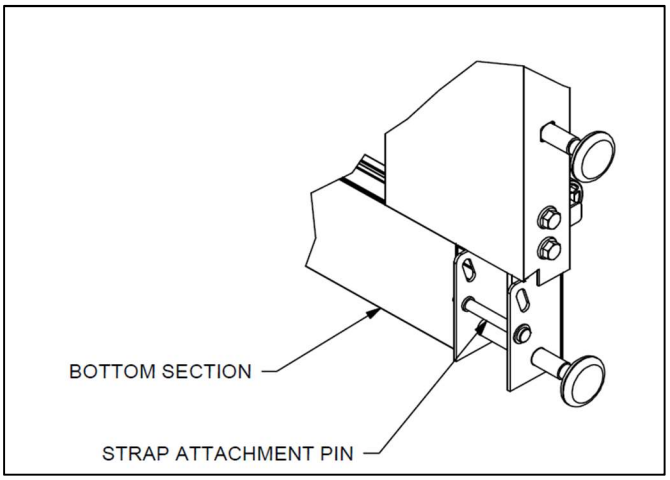


***Figure 14 - ATTACHING STRAP TO BOTTOM SECTION***

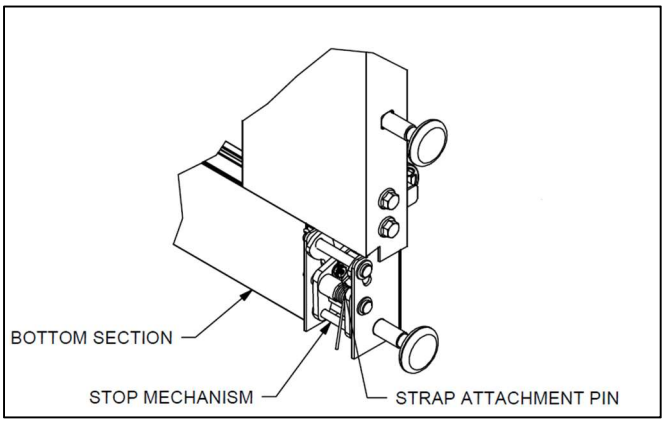


***Figure 15 – ATTACHING SAFETY BRAKE SAFETY SYSTEM TO BOTTOM SECTION with the STOP BRACKET ASSEMBLY***

35. Place the bottom section into the opening down through the vertical track, as seen in **Figure 16**, and place section on floor.

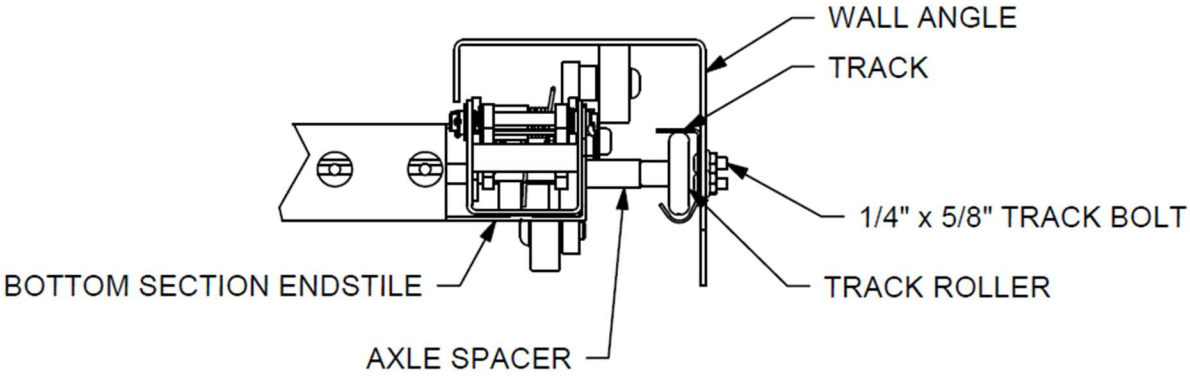


***Figure 16 - RIGHT-HAND TRACK AND TRACK ROLLER SPACING***

36. If the floor is out of level, shim the bottom section to make it level at this time.

## Installing the Shaft assembly, Spools, and Straps

37. Prior to installing the shaft assembly, ensure that there is adequate structure - noted as the spring pad on the shop drawing - for spring anchor brackets located near the center of the shaft, above the opening, and (if required) for additional shaft support brackets. See shop drawing for location of the spring pads.

**⚠WARNING**

**Each spring anchor bracket requires a wood/steel spring pad. Spring pads and hardware are not supplied. You must make sure that the wood or steel spring pad is of good quality and free of cracks or splits. (Note: A single spring pad could be used to mount up to two spring anchor brackets). Failure to provide the necessary spring pad could result in the sudden release of spring forces with dangerous force and severe injury.**

**IMPORTANT: The wood spring pad must be made of a Grade 2 or better southern yellow pine (also known as southern pine or yellow pine) 2" x 6" x 12" [51mm x 152 mm x 305 mm] minimum. The southern yellow pine must be free of splits and cracks. Do not use wood labeled as spruce-pine-fir (or SPF). Use of SPF or other non-approved material could result in the sudden release of spring forces with dangerous force and severe injury.**

**Steel spring pads should be 1/4" x 10" x 12" [6 mm x 254 mm x 305 mm] minimum, securely fastened to the structure.**

**The wood/steel spring pad must be installed into the structural frame of the building, not on/over drywall or sheet rock. Use at least (4) 3/8" x 3" [10 mm x 76 mm] long lag screws (not supplied) for wood structures or 3/8" [10 mm] masonry anchors (not supplied) for concrete/block structures (one at each corner). Do not install lag screws/masonry anchors less than 1-1/2" [38 mm] from the sides or ends of the spring pad. Under no circumstances should the spring pad be attached with nails. FAILURE TO SECURE THE SPRING PAD TO THE STRUCTURAL FRAME OF THE BUILDING WITH THE REQUIRED TYPE AND NUMBER OF LAG SCREWS/MASONRY ANCHORS COULD RESULT IN THE SUDDEN RELEASE OF SPRING FORCES WITH DANGEROUS FORCE AND SEVERE INJURY.**

38. Establish a “level line” across the header located at the center of the shaft bearings in the left and right-hand bracket assemblies.

39. Establish a “centerline” on the header between the bracket assemblies.
40. Fasten the spring anchor bracket to the spring pad using the provided red-color fasteners.

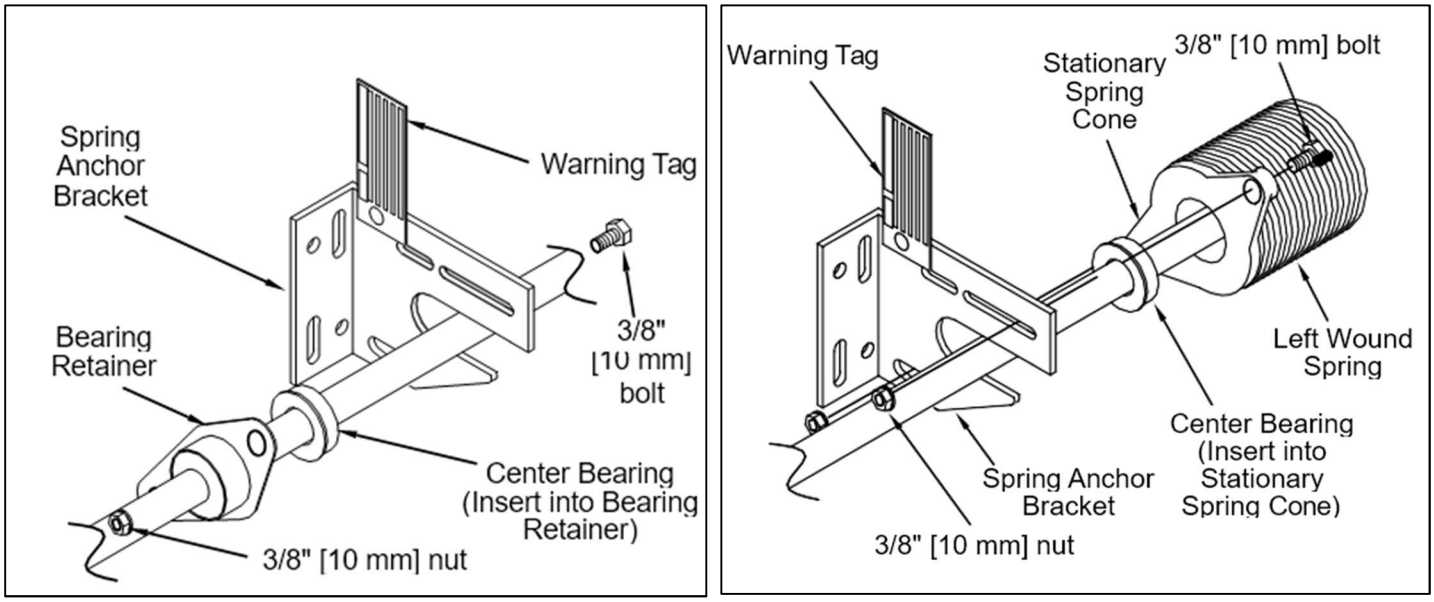


***Figure 17 – SPRING ANCHOR BEARING ASSEMBLY***

41. Use the supplied 1.188” spool-bearing spacers between the spool and shaft bearing

42. Loosen all set screws on winding cones, couplers, and spools. In this order, slide the center bearing, spring (with cones), spool, spool-bearing spacer, shaft bearing, and sprocket onto shaft as seen in **Figures 17 & 18**.

    a. Additional bearings and anchor brackets may be required and as designated on the shop drawing. If so, they must be assembled to the shaft before the spools, as shown in **Figure 18**.

        i. Note: Verify requirements on shop drawing.

    b. If the configuration requires a split shaft, install half of shaft coupler on each shaft. Install shaft key before tightening set screws. Note: Do not exceed ½ turn after coming in contact with the shaft.

43. Fasten spring anchor bracket to spring pad using:
    a. Wood structure: 5/16" x 1-5/8" [8 mm x 41 mm] **RED-COLORED** lag screws.
    b. Steel structure: 5/16" x 1" [8 mm x 25 mm] **RED-COLORED** self-tapping screws.

44. Center shaft(s) in opening and rest the shaft(s) on the brackets, oriented as shown in **Figure 18.** Slide spring anchor cone/center bearing against spring anchor bracket and attach loosely using (2 each) 3/8" x 1-1/2" [10 mm x 38 mm] cap screws and nuts. Fasten shaft couplers (if necessary) together while making sure to keep the keys aligned.
45. Make sure the shaft protrudes past the bracket on the side of the operator by at least 3.00” to allow for installation of the sprocket. Note: If necessary, excess shaft material could be cut and removed.
46. Fasten shaft bearings to brackets using (4 each) 3/8” x 1-1/4” [10 mm x 32 mm] bolts & nuts.
47. Tighten spring anchor cone/center bearing fasteners to spring anchor bracket.

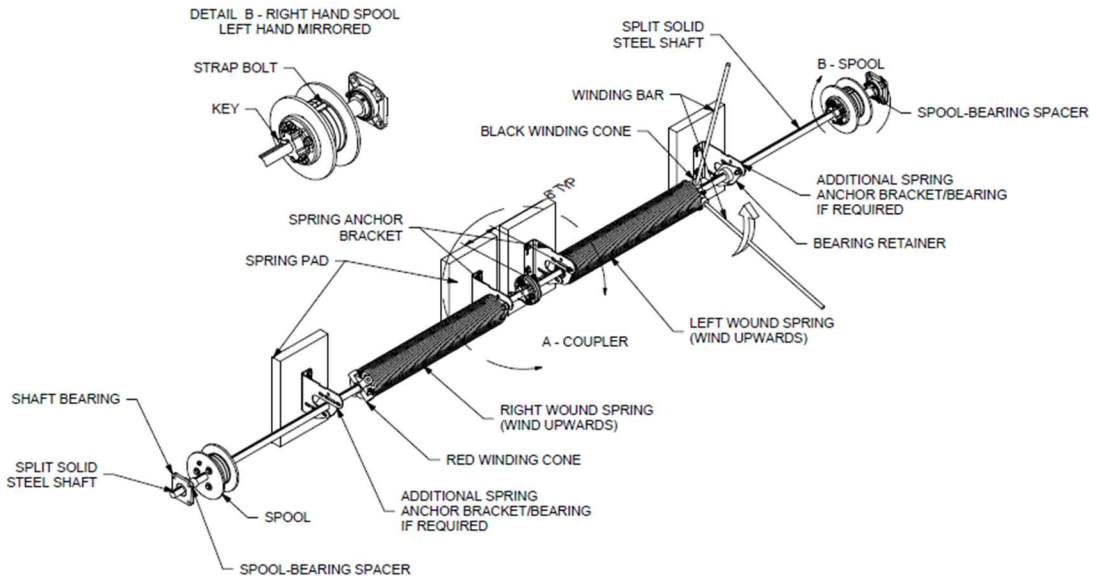


***Figure 18 – SHAFT ASSEMBLY***

48. To attach the strap to the spool, feed the strap up behind and over the top of the spool and into the strap slot, with the tag side facing in toward the spool, thread the strap bolt through the spool flanges and securely tighten the strap bolt. Repeat for the other side.
49. Slide both spools tight against the spool bearing spacer and the collar on the shaft bearing in the bracket assembly.

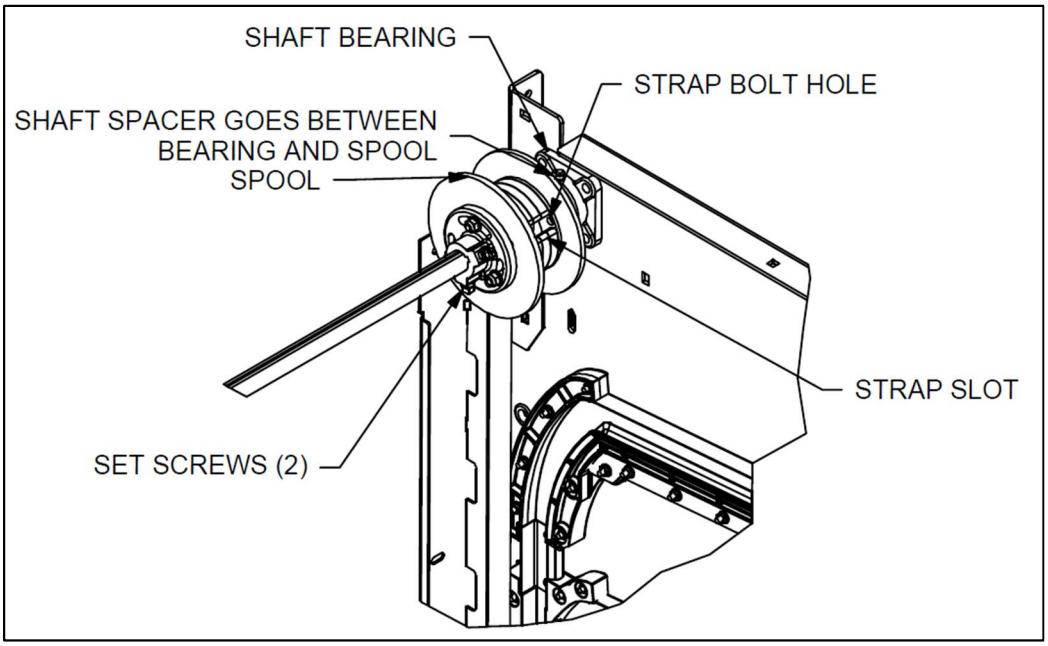


***Figure 19– ATTACHING STRAP TO SPOOL – RIGHT HAND BRACKET***

50. Rotate each spool to take up the excess strap until the straps are taut and insert 1/4" x 1/4" [6 mm x 6 mm] keys and then tighten the set screws on the spools. There should be a minimum of one wrap of strap on the spool.
51. Make sure the straps are straight from the shaft to the bottom section attachment then lock the spools in place with keys and the shaft collars on the spools.
52. Clamp the shaft in place to keep the straps tight.
53. Install the drive sprocket on the shaft, on the same side as the operator.

**⚠ WARNING**

***The push button switch must be set to "momentary pressure" and installed within 3 feet of the door with a clear visual line of sight of the door. The individual operating the door must ensure there are no other people or objects within a three (3) foot radius of the door while in operation and must watch the door at all times. Failure to follow this warning and instructions may cause contact of door with people and/or objects that results in death or severe injury, including pinch, crush or amputation-type injuries.***

## Installing the Motor Operator

54. Locate the motor mounting bracket, per configuration ordered. See **Figure 20** below for possible configurations.

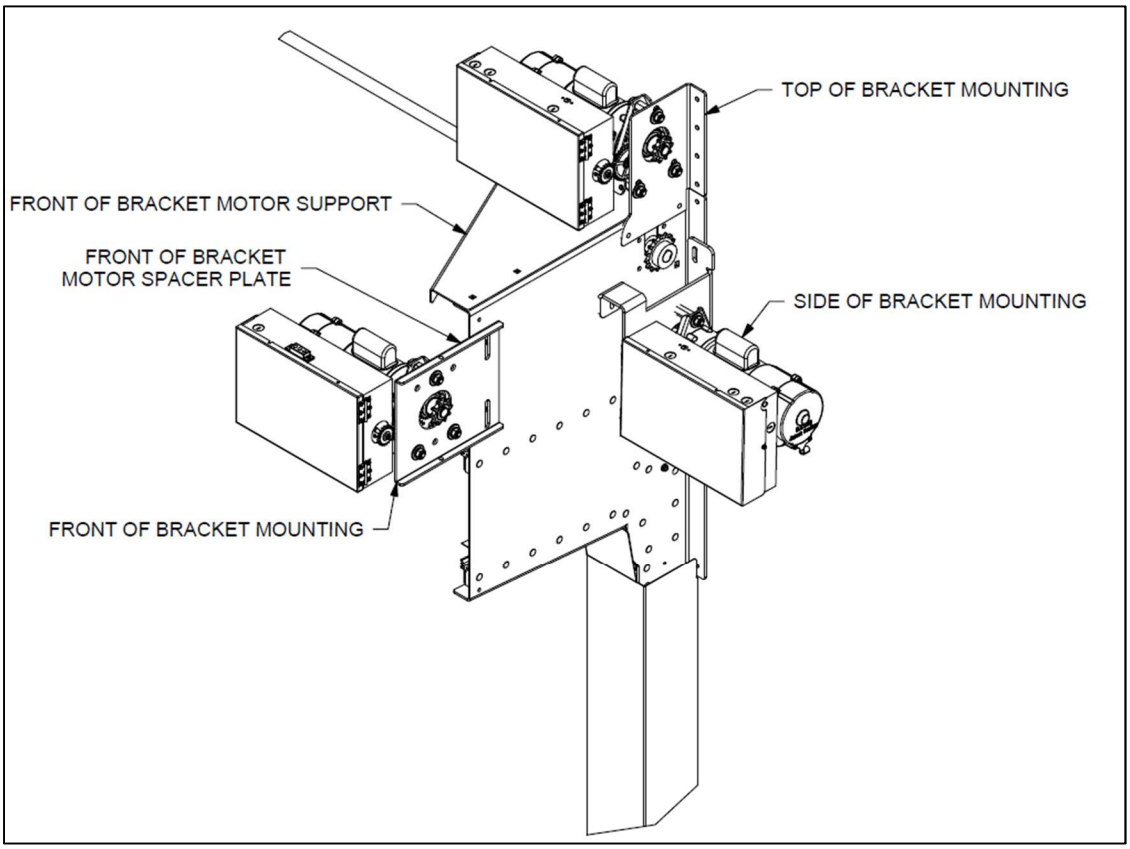


***Figure 20 – MOUNTING CONFIGURATIONS (RIGHT-HAND MOUNT SHOWN)***

55. Mount the motor operator to the motor mounting bracket using the ½" [13 mm] hardware provided. Then install the roller chain and tighten the screw on the shaft sprocket. Remove clamp(s) on the shaft used to keep straps tight.

56. Fasten the motor mounting bracket to the bracket plate using the provided 3/8 x 1” [10 mm x 25 mm] carriage bolts. Then, if required, fasten the motor bracket to the wall using the appropriate hardware for the wall construction.
57. Wire the motor operator per the instruction manual in the operator box.

**IMPORTANT: At this time, do not operate motor until all steps up to Step #87 are complete.**

## Installing the Header Seal Cross Member

58. Attach the header seal cross member ¼” [6 mm] above the header/lintel and flush with the jambs.

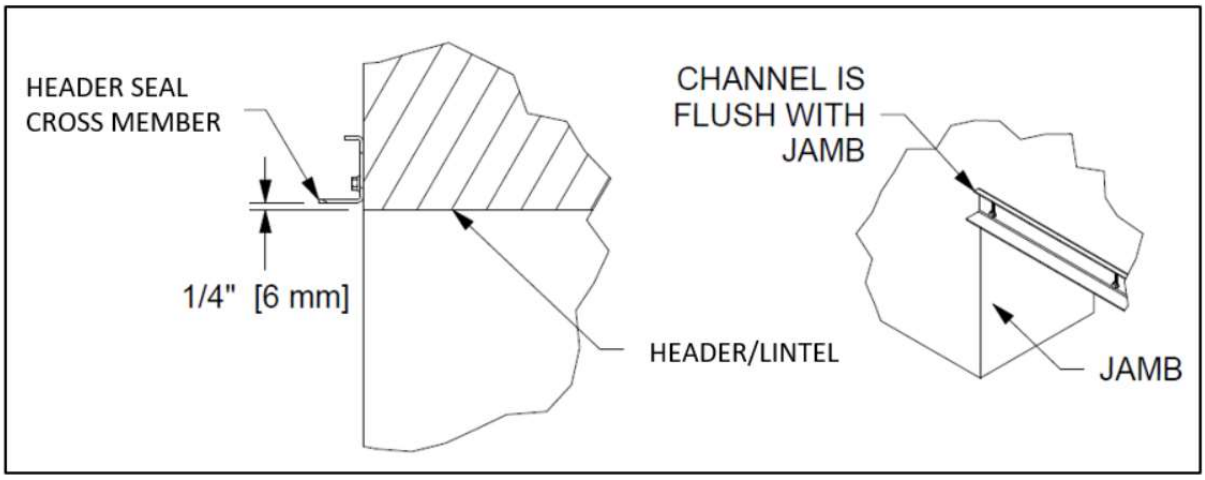


***Figure 21– INSTALLING THE LINTEL SEAL***

## Wiring Sensors to the Operator

59. Connect sensors to supplied wire extension cables and route toward side of door where operator is mounted, utilizing slots in wall angles to pass through header seal cross member as shown in **Figure 22**.
60. Tighten up slack in cables and pull all extra wire through ramp slots to top of bracket and over to operator.
61. At this point, it would be best to route the lock wiring. Both interlock switches must be wired as Normally Open (NO) and in series and the wires should follow a similar path to that of the sensor wiring harness. The wires first run from the outside of the wall angle, then through a hole near the junction of the lower and upper wall angles, and finally through the ramp and either across the header seal cross member or up to the operator (depending on side). Be sure to leave additional length of wire and not to terminate at this time, as lock adjustment might still be necessary at later steps.
62. Make sure the wires are out of the way of the operation of the door. Because it may be necessary to make adjustments in a later step, do not permanently secure the wires until Step 80.

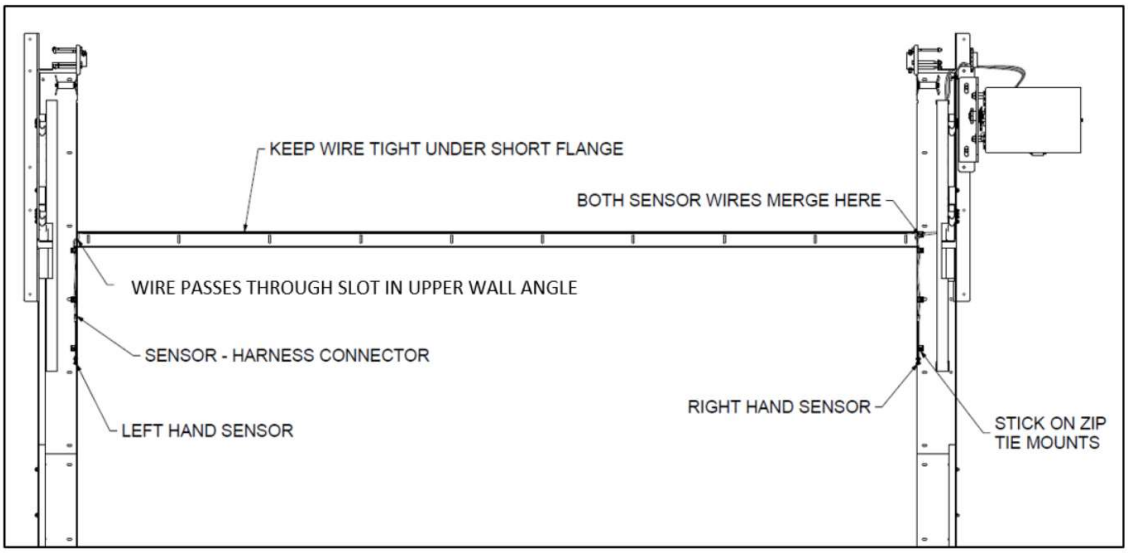


***Figure 22- SENSOR WIRING PLACMENT DIAGRAM (RIGHT-HAND MOUNTED OPERATOR SHOWN)***

## Installing Track Rollers and Loading Intermediate Section

63. Install the black track rollers in all sections, making sure to slide an axle spacer on each of the track roller axles before inserting the track rollers into the end stiles of each section.

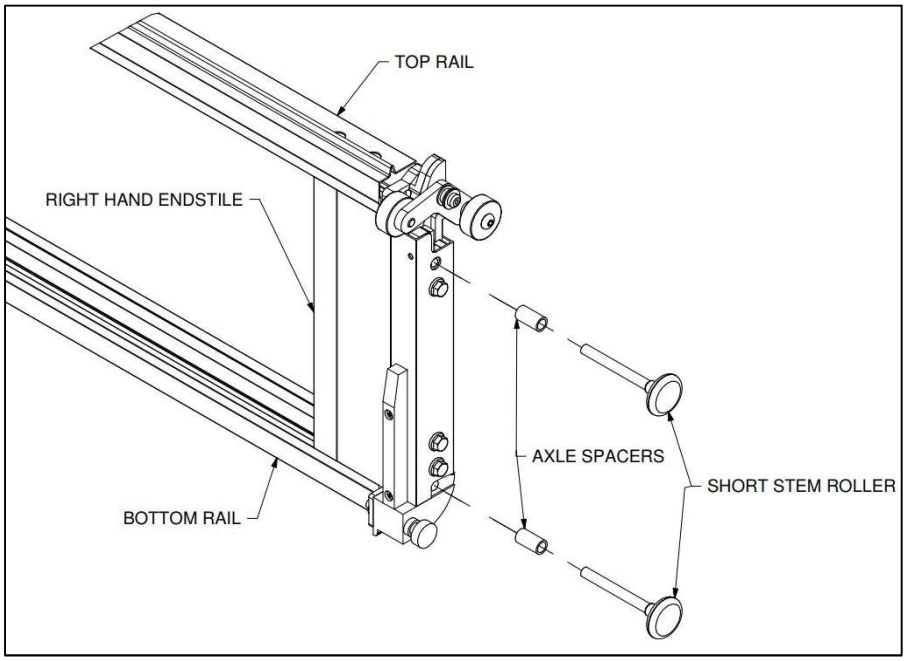


***Figure 23– INTERMEDIATE SECTION***

64. Load the intermediate sections one at a time using the void in the track between the lower track section and the bottom radius in the bracket assembly.
65. Stack the intermediate sections until the lower section of the track is full.
66. Attach the removable track section, using the supplied track bolts and nuts and as shown in **Figure 24**, ensuring the upper and lower track joints are smooth.

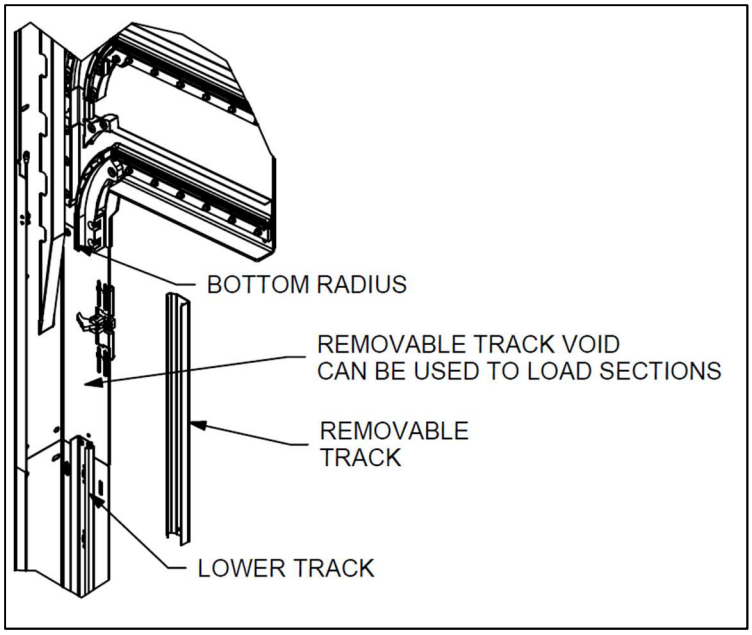


***Figure 24– REMOVABLE TRACK***

## Installing Lintel Seal Plate to the Top Section

67. The top section is taller than the intermediate section and does not have rocker arm assemblies. See **Figure 25**.

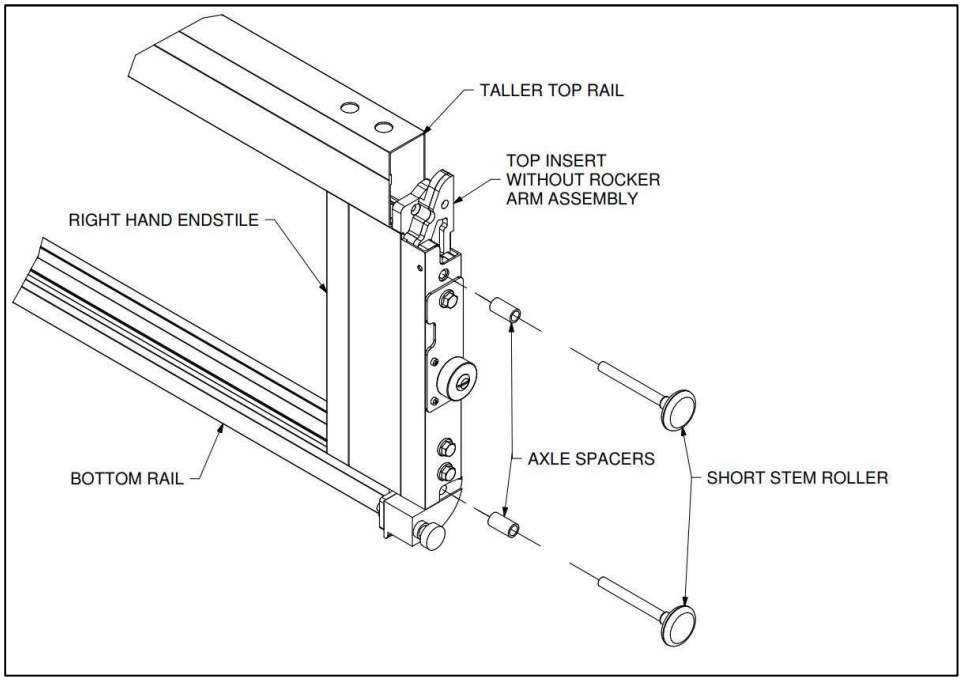


***Figure 25– TOP SECTION***

68. Place the top section on sawhorses or other supports.
69. Insert the black track rollers with axle spacers into the end stiles.
70. Fasten the lintel seal plate to the top rail of the top section with the provided self-tapping screws. See **Figure 26** for plate location. This plate compresses the lintel seal into the header seal cross member attached to the header/lintel.
71. Install the lintel seal (reverse angle seal) to the lintel seal plate.

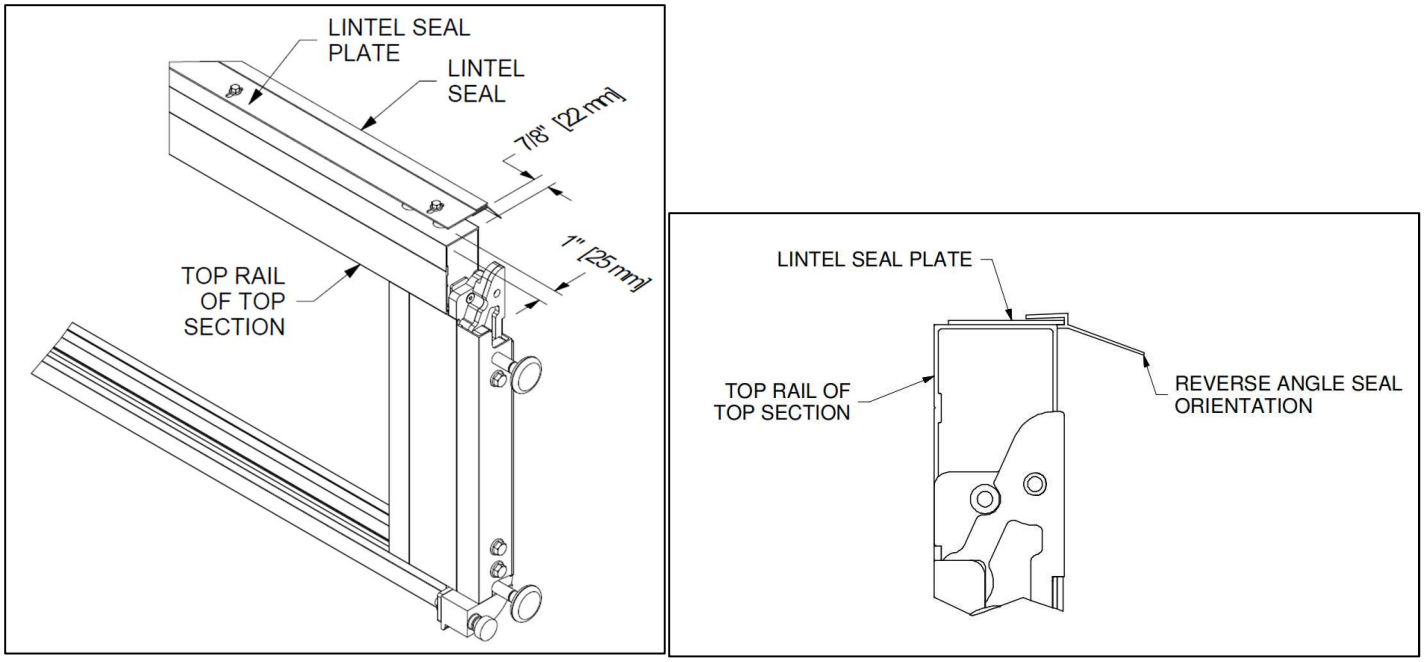


***Figure 26– LINTEL SEAL FASTENED TO TOP SECTION***

72. Adjustments may be needed to locate the lintel seal plate so that it properly seals with the header seal cross member. Use the slots in the plate to move it in or out and then tighten the fasteners to hold in place.

## Loading the Top and Remaining Intermediate Sections

73. Carefully load any remaining intermediate sections followed by the top section, through the back of the bracket assembly and in to the horizontal track (see **Figure 27**).
    a. Align the upper and lower wheels on each end of the section with the horizontal tracks mounted on each bracket.
    b. Move the top section to the radius of the track and gently lower it onto the intermediate sections currently in the vertical track.

**⚠CAUTION**

**Do not allow any section to drop in an uncontrolled fashion or damage may occur. Take care to lower each section down slowly.**

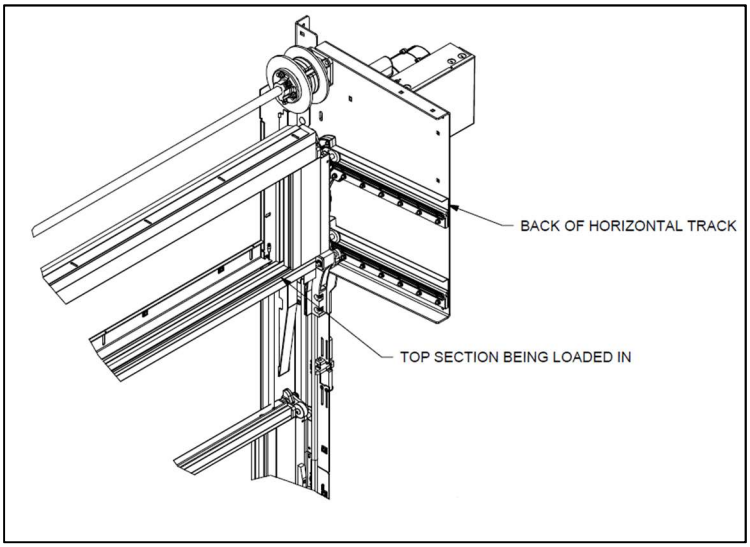


***Figure 27– LOADING THE TOP SECTION INTO THE MAGAZINE***

Fasten the bracket stop plate, using the supplied track bolts, to the back of both left and right-hand bracket assemblies. The bracket stop plate retains the sections in the magazine and must be installed.

74. With all sections installed and properly set, confirm the lintel seal (top section) is in contact with the header seal cross member (wall header). If not, adjust the header seal cross member until contact is made.

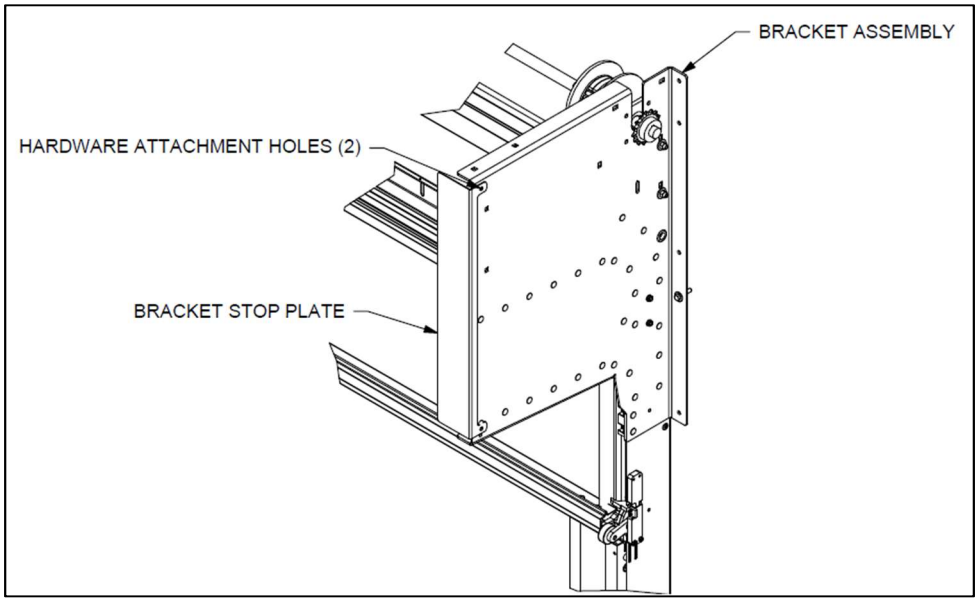


***Figure 28– BACK BRACKET INSTALLED***

## Installing the Lock

75. The lock adjustment assembly is preinstalled on the upper wall angle and the lock handle is zip tied to the lower wall angle.
76. Start by locating the square rod, which will be used to connect the lower handle to the upper lock stop.
77. Insert the rod through the lock handle, lock stop, and bushings. Ensure the handle and lock stop are both in the unlocked state when attaching and secure the setscrew on the handle. Refer to **Figure 29** and **Figure 30** for orientation.
78. Rotate the lock in to the locked position and, if necessary, loosen the four lock adjustment fasteners and adjust the lock height adjustment bracket until the lock stop engages the lower track roller axle on the top section (bottom of the lock stop makes contact with top of the roller axle) and re-tighten fasteners.
79. Secure the setscrew on the lock stop.
80. Terminate the wires (previously ran during sensor wiring) at the interlock switches and pull through any excess wire toward the operator side of the door.

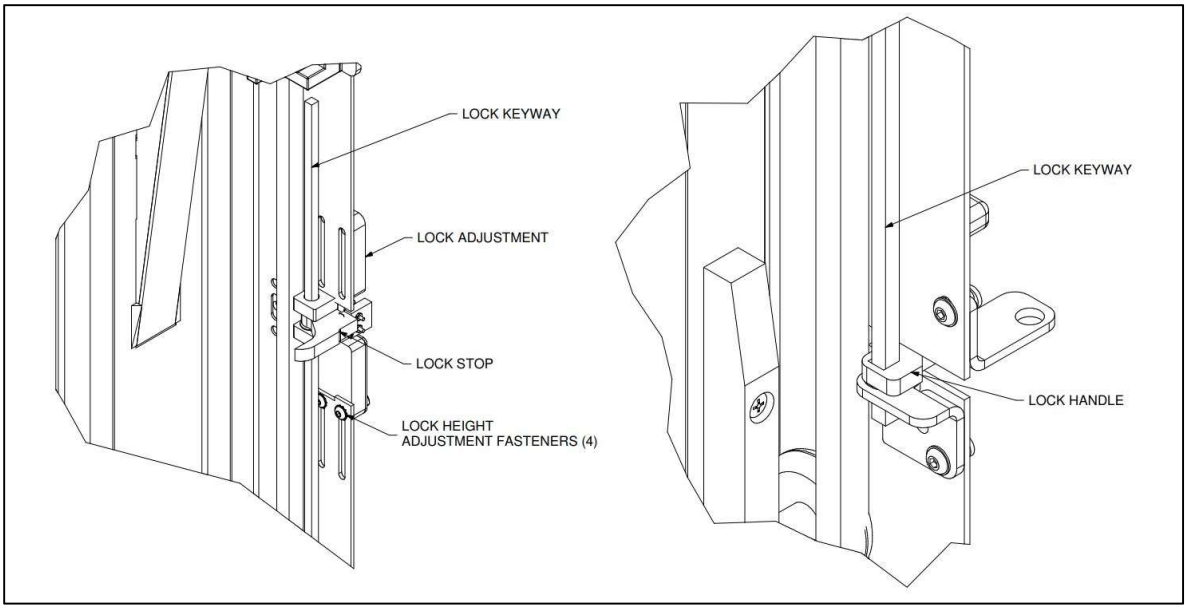


***Figure 29 – LOCKING SETUP (Right Hand Guide – Unlocked State)***

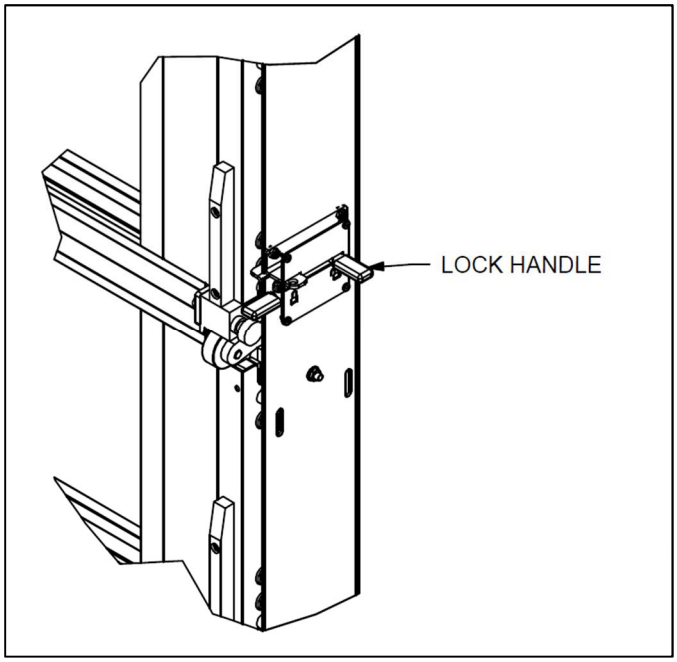


***Figure 30 - LOCK HANDLE (Right Hand Guide – Unlocked State)***

## Installing Sensing Devices

Note: See Operator Manual for wiring information.

81. Sensing Edge:
    a. If the sensing edge option was selected, see separately supplied sensing edge installation instructions and proceed to Step 88.
82. Light Curtains:
    a. Two sizes for the light curtains are shown, a 3' and 6' option. Review your order to make sure you have the correct size light curtain, otherwise the door may be inoperable.
    b. Attach the light curtain brackets on the guide covers to the light curtain using the 3/8" [10 mm] fasteners.
    c. On the operator side, run wire up to the operator on the outside of the wall angle, making sure to keep the wire located toward the center of the wall angle, except for near the lock assembly where care must be taken to protect the wire from being damaged by the lock mechanism.
    d. Route through the bracket hole as done earlier for the section separation sensor wiring and use the supplied cable ties and mounts to secure along the length of the wall angle.
    e. On the non-operator side run the wire up the outside of the wall angle and pass through grommet hole in bracket and follow header channel seal member across opening width and to the operator, similar to what was done for the sections separation sensor wiring.

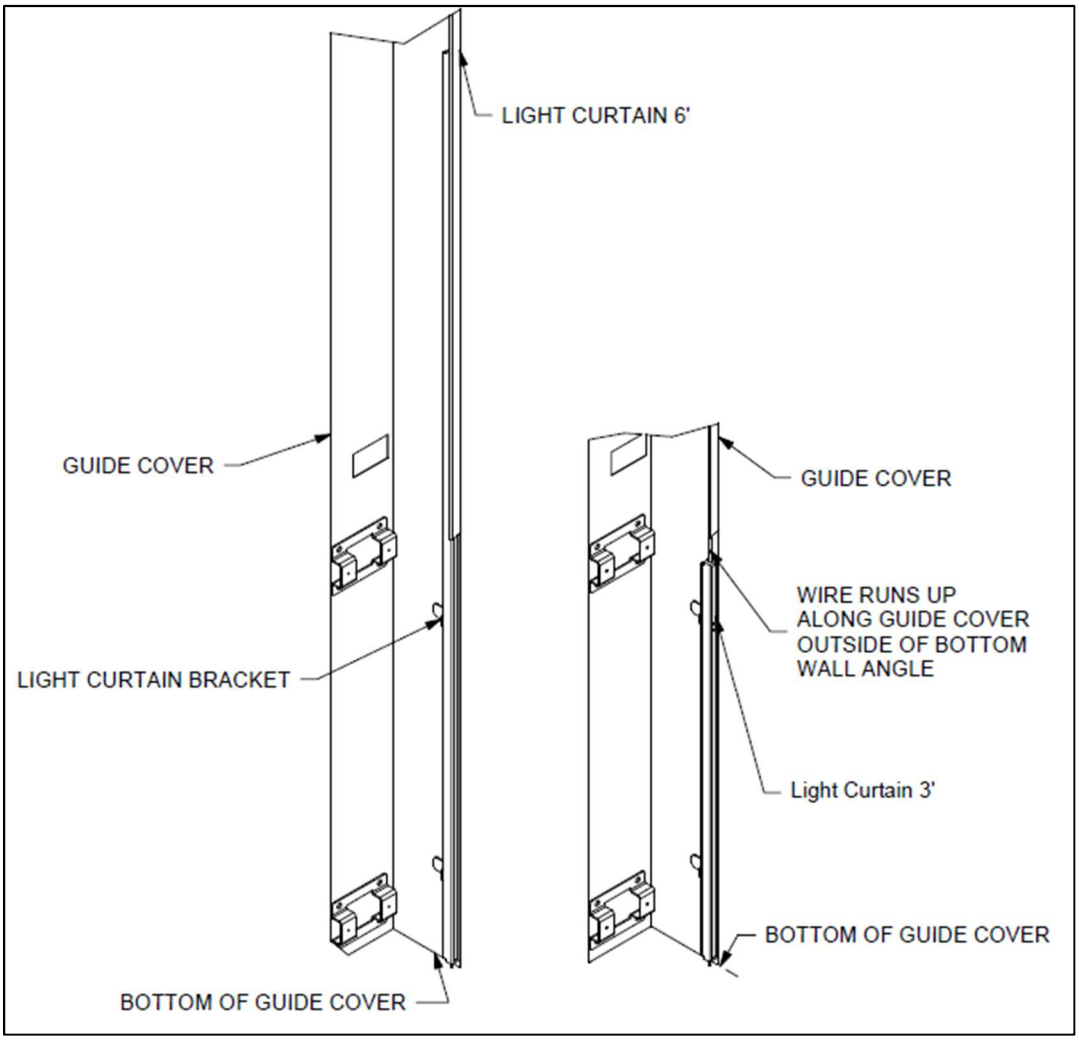


***Figure 31 – Light Curtain Attachment (Right Hand Guide)***

83. Photo Eyes:
   a. Photo eyes are installed on the lower portion of the lower wall angles.
   b. Attach the guide mounting bracket to the lower wall angle.
   c. Orient the photo eye and secure to guide mounted bracket as shown in **Error! Reference source not found.** below. Note: Different photo eye options might differ in appearance but are mounted in a similar manner.
   d. On the operator side, run wire up to the operator on the outside of the wall angle, making sure to keep the wire located toward the center of the wall angle, except for near the lock assembly where care must be taken to protect the wire from being damaged by the lock mechanism.
   e. Route through the bracket hole as done earlier for the section separation sensor wiring and use the supplied cable ties and mounts to secure along the length of the wall angle.
   f. On the non-operator side run the wire up the outside of the wall angle and pass through grommet hole in bracket and follow header channel seal member across opening width and to the operator, similar to what was done for the sections separation sensor wiring.

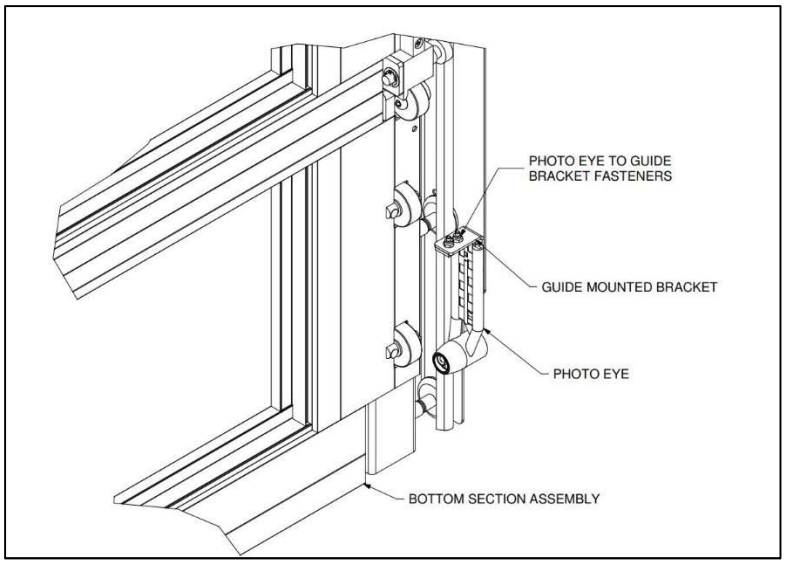


***Figure 32 - PHOTO EYE ATTACHMENT***

## Winding the Spring

**⚠ WARNING**

**SPRING TENSION IS DANGEROUS. A sudden release of the springs could result in severe injury. Proceed with caution, following these instructions carefully. Before winding any tension on springs, make sure the door is securely locked down with a vise-grip placed on vertical track above a roller such that the shaft of the door will not rotate as the spring is being tightened. Stand to the side of winding bars while winding springs.**

**Be sure to check the spring(s) to ensure it is the gauge and diameter stated on the door documentation.**

**Always use good quality, snug fitting, constant diameter, solid steel winding bars when winding or adjusting springs. Never use screwdrivers or any tool too large or too small. The use of any other object can result in severe injury. When winding springs, the winding bar must be inserted into the full**

**depth of the holes in the winding cone. Keep a firm grip on the winding bars at all times. Use a sturdy ladder and stand to the side of the winding bars.**

84. Draw a straight line across the spring. This will be used as a reference to indicate the number of turns on the spring as turns are added. As the spring is wound, the line will appear to wrap around the spring. Counting the number of wraps minus one (1) will equal the number of turns that have been completed. Springs will get longer when wound.
85. Using two cold rolled steel winding bars about 18” [457 mm] long (not supplied) that fit snugly in the winding plug holes, wind the spring toward the ceiling as shown in **Figure 18**. This figure is a generic example and may not necessarily match the required spring arrangement for your door. Wind each spring the number of turns shown on the hardware box label.
86. Tighten the set screws of the winding cones, taking care to not exceed ½ turn after coming in contact with the shaft.

**⚠ WARNING**

**At this point, springs are fully wound. Springs should stretch easily. Do not force the springs, as it could break the winding plug and create a sudden release of the springs which could result in death or severe injury.**

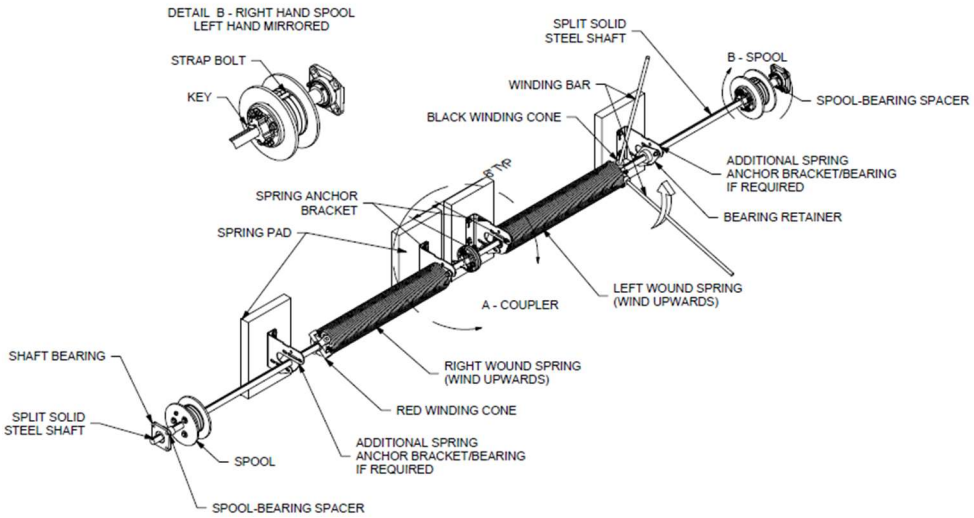


***Figure 33: Shaft assembly, winding spring***

## Setting the Operator Limits & Torque Sensor

87. With the springs fully wound and the motor operator installed with the roller chain and sprocket, the door can be raised into the “magazine” (aka bracket) assemblies.
    a. As the door raises, watch the straps and ensure they properly wrap around the spool, i.e. the strap should not fold over on itself. If this occurs, the spool should be adjusted either left or right on the shaft to correct the issue.

**NOTICE**

88. Raise the door until the bottom section is approximately flush with the lintel.
    a. Watch the door carefully as it is transitioning from the vertical track to the horizontal track in the magazine so that sections **do not** get pushed out of the back of the horizontal track in the brackets.
    b. Note that the top limit for the operator is not set, **do not** raise the bottom section too high as this may cause damage to the door.

89. Set the upper limit on the operator.
90. Set the torque sensor on the operator (detailed instructions found in the Operator's Manual).
    a. The initial goal is to adjust the torque sensor until the door fails to close. If the door still closes, adjust the sensor by ½ turn increments (increasing sensitivity) until it no longer closes.
    b. (Note: Make sure any failure to close is not due to an electrical sensor failure before adjusting the torque sensor.) Once the door will no longer close, adjust the torque sensor by ¼ turn (decreasing sensitivity) until the door will fully close.
    c. Once the door fully closes, adjust the torque sensor by one final ½ turn (decreasing sensitivity).
91. Lower the sections into the opening until the bottom section astragal reaches the floor and compresses slightly.
92. If the door is out of level, loosen the shaft coupler bolts slightly to allow the coupler to rotate to take up slack in either strap. Tighten the coupler bolts.
93. Set the lower limit on the operator.
94. Now fully raise and lower the door five (5) times, making sure the straps are wrapping properly on the spools. If adjustments are necessary, repeat cycling the door five (5) times after each adjustment.

## Installing the Jamb Seal

95. Measure from floor to the lintel seal channel, add 1" and cut the jamb seal to length. The additional 1" will allow for trimming the corners where the jamb seal meets the lintel seal when the door is closed.
96. Push the jamb seals onto each wall angle flange until fully seated as shown in **Figure 34**.
    a. Trim the small leg of the seal to fit around the sensor. Leave a ¼" gap above and below the sensor.

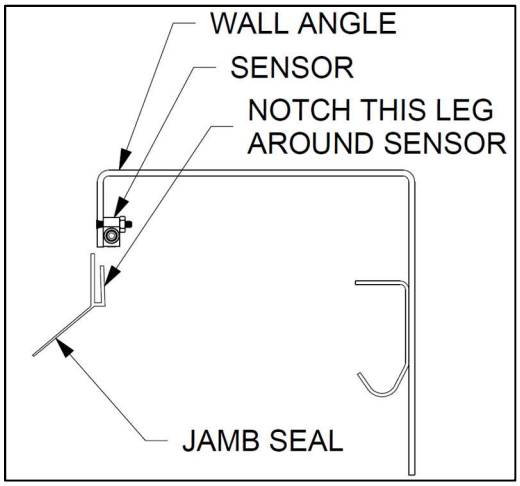


***Figure 34– JAMB SEAL***

## Installing the Guide Covers

97. The guide cover uses a slot and bracket method for attachment. Line up the slots of the lower wall angles to the holes of the brackets on the guide covers. Use the provided number 10 fastener bolts to attach the two together.
98. Attach lock plate cover over lock handle and fasten with the self-drilling screws.
99. Repeat for other side.

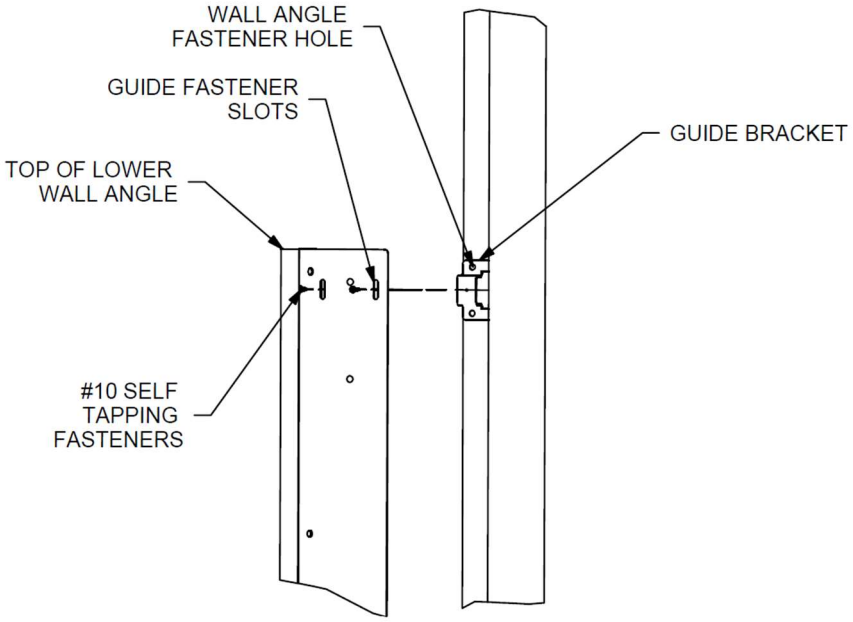


***Figure 35 – GUIDE COVER ATTACHMENT***

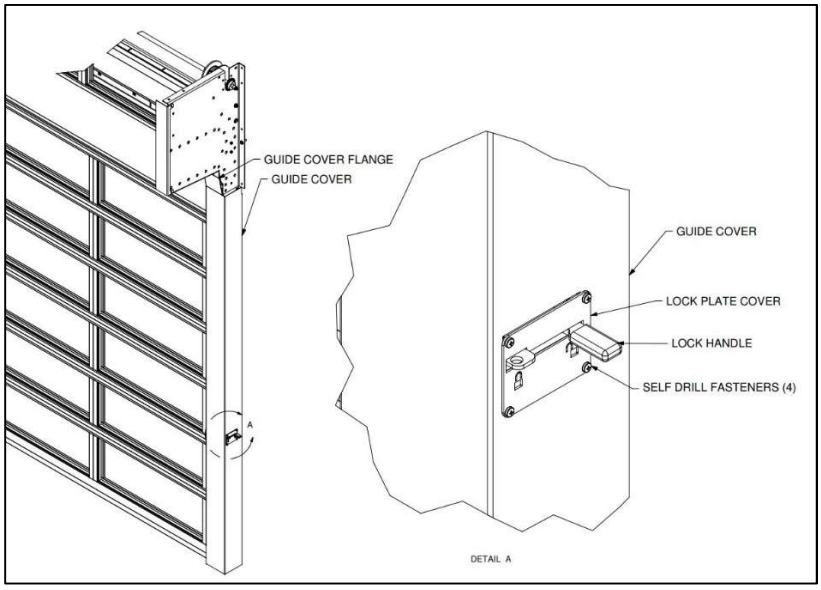


***Figure 36– TRACK COVER***

## Installing the Hood (If Equipped)

100. Install the center hood support first, if supplied. Attach the center hood support to the spring pad in the center of the opening, ensuring the top of support bracket is flush with top of both left and right-hand brackets. Refer to **Figure 37**. (Note: Hood will be installed outside of hood support bracket)

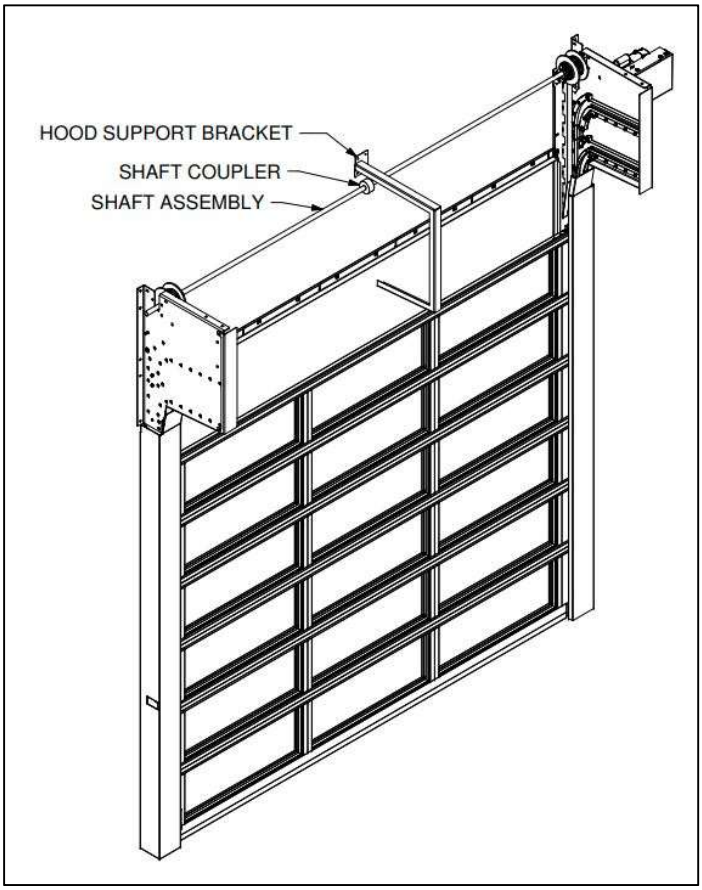


***Figure 37 - HOOD CENTER SUPPORT***

101. Install Soffit (lower) hood section first, followed by the front section and, if supplied, lastly the top section. Use supplied self-drilling fasteners, attach fasteners through hood into side and center support (if provided) brackets. Refer to **Figure 38**.

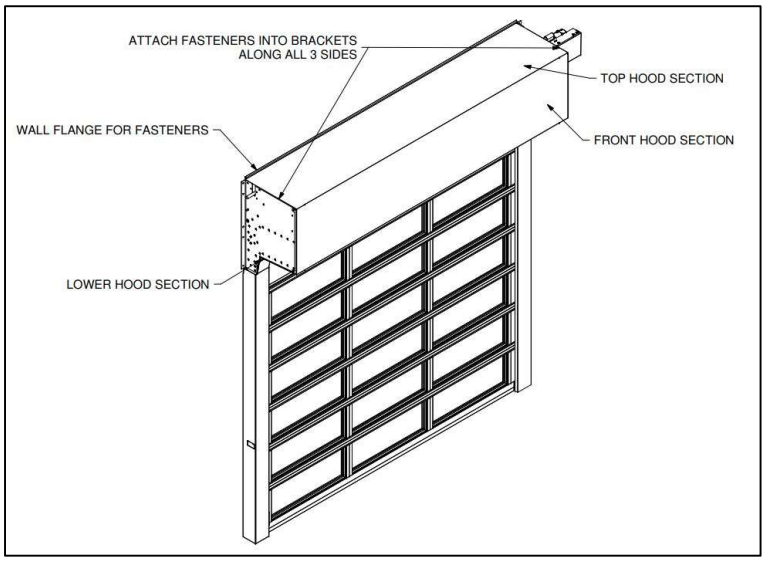


***Figure 38 – HOOD INSTALL (3 SECTION OPTION SHOWN)***

## Installing Chain Cover (If Equipped)

102. If the chain cover option is selected, attach the chain cover around the motor mounting bracket, chain and sprocket.
    a. Side mount configuration: Align the top holes of the chain cover with the top of the motor bracket and align the slotted holes with the holes in the bracket. Then, use the #10 self-drilling screws to attach the chain cover to the motor bracket at the top and the wall fasteners used to mount the bracket for the bottom slots. Reference **Figure 39.**
    b. Front mount configuration: Use the 1/2 [13mm]" carriage bolts hardware provided to attach the chain cover to front of bracket motor support, Reference **Figure 40**.
    c. For the top motor mount, use the #10 self-drilling screws to attach the chain cover to the motor bracket. Reference **Figure 41**.

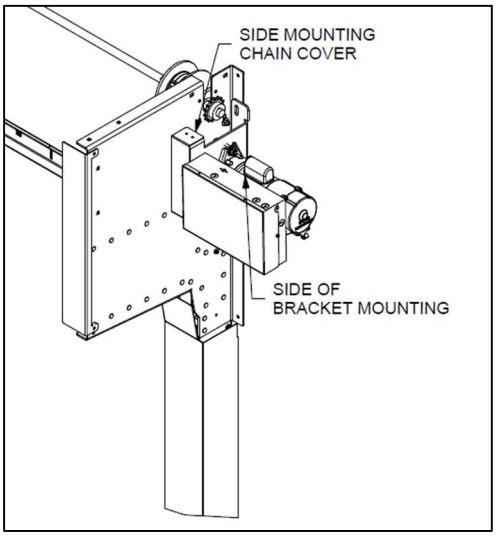


***Figure 39 – SIDE BRACKET CHAIN COVER***

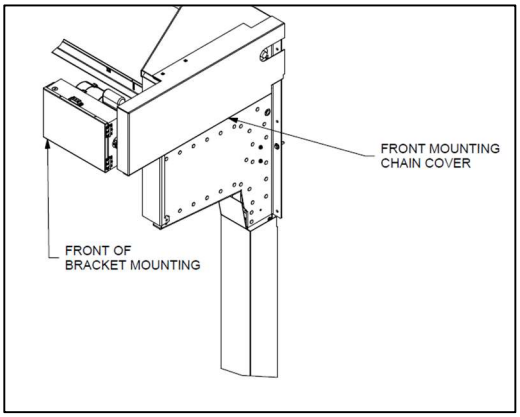


***Figure 40– FRONT MOUNTING CHAIN COVER OPTION***

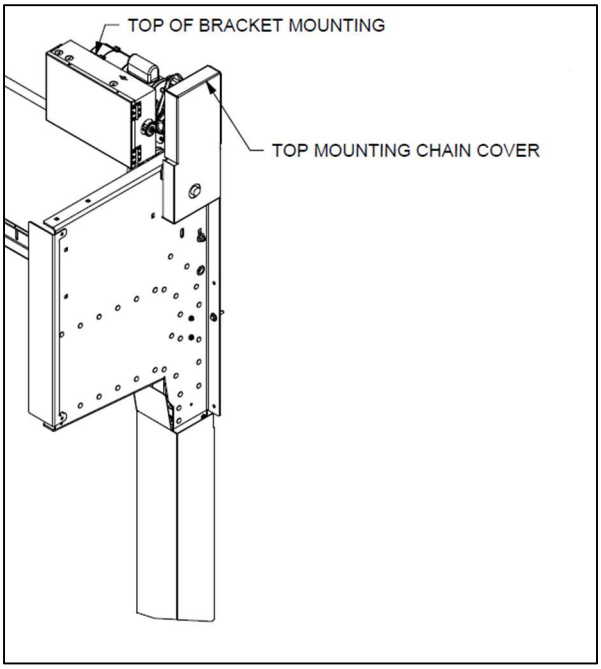


***Figure 41 – TOP MOUNTING CHAIN COVER OPTION***

# Maintenance

**WARNING**

**Do not attempt to adjust door components. Call an authorized representative of the manufacturer or professional door repair service promptly. Attempting to adjust door components may cause the doors sections to suddenly release with force and risk of death or severe injury, including pinch, crush or amputation-type injuries.**

- Avoid touching the door at all times, but if necessary for cleaning or other non-operational reason, do so only when in the fully closed and locked position.
- Visually inspect the door monthly to identify work or broken parts, or determine if the door is out of adjustment or unevenly balance.
- Every twelve (12) months, a VertiStack certified installer must inspect the following for damage, loosening, and/or misalignment, and repair as necessary:
    - Door plumb/level
    - Straps
    - Torsion spring plugs and spring anchors
    - Bearings in end bearing plates
    - Rollers, rocker arms, slides
    - Track alignment
    - Bracket assembly attachment
    - Motor operator and roller chain attachment
    - All screws and nuts – including setscrews in bearings, spools, winding cones, etc.